SITE ID: SPC007
SITE NAME: COE ROAD
SITE ADDRESS: S. COE ROAD
SPOKANE, WA
JURISDICTION: SPOKANE COUNTY
SITE TYPE: 160' SELF-SUPPORT

SITE INFORMATION

PI TOWER ID:	SPC007
PSD267 SITE NAME:	COE ROAD
SITE ADDRESS:	S. COE ROAD SPOKANE, WA
COUNTY:	SPOKANE COUNTY
E-911 ADDRESS:	TBD
AREA OF CONSTRUCTION:	RAWLAND
LATITUDE:	47.329656°
LONGITUDE:	-117.444919°
LAT/LONG TYPE:	NAD83
JURISDICTION:	SPOKANE COUNTY
ZONING:	LTA
OCCUPANCY CLASSIFICATION:	U
TYPE OF CONSTRUCTION:	11B
A.D.A. COMPLIANCE:	FACILITY IS UNMANNED AND NOT FOR HUMAN HABITATION
LAND OWNER:	SPOKANE REGIONAL EMERGENCY COMMUNICATIONS SYSTEM 1121 W. GARNER AVE SPOKANE, WA 99201 509-477-5763
TOWER OWNER:	New J 7916 W. SUNSET HWY SPOKANE, WA 99224
ELECTRICAL SERVICE PROVIDER:	TBD
TELCO PROVIDER:	TBD

DRAWING INDEX

SHEET	SHEET DESCRIPTION
T-1	TITLE SHEET
GN-1	GENERAL NOTES
GN2	GENERAL NOTES
A-1	SITE PLAN
A-2	ENLARGED SITE PLAN SKID DETAIL
A-3	ELEVATION
A-4	EQUIPMENT CABINET
A-5	ANTENNA LAYOUT AND RF SCHEDULE
A-6	EQUIPMENT DETAILS
A-7	EQUIPMENT DETAILS
A-8	EQUIPMENT DETAILS
E-1	UTILITY PLAN
G-1	GROUNDING DETAILS
G-2	GROUNDING DETAILS

NEW J CONSTRUCTION DRAWINGS

ALL DRAWINGS CONTAINED HEREIN ARE FORMATTED FOR 11X17 CONTRACTOR SHALL VERIFY ALL PLANS, EXISTING DIMENSIONS AND CONDITIONS ON THE JOB SITE AND SHALL IMMEDIATELY NOTIFY THE ENGINEER IN WRITING OF ANY DISCREPANCIES BEFORE PROCEEDING WITH THE WORK OR BE RESPONSIBLE FOR SAME.

LOCATION MAP

DIRECTIONS:

T-SQUARED SITE SERVICES, LLC

Digitally signed by Craig A Russo, P.E.
DN: c=US, sn=Russo, P.E., givenName=Craig A, email=craig.r@t-sqrd.com, cn=Craig A Russo, P.E.
Date: 2023.08.25 10:35:45 -04'00'

PROJECT TEAM

A&E FIRM: T–SQUARED SITE SERVICES, LLC
2501 SHENANGO VALLEY FREEWAY
SUITE 3 HERMITAGE, PA. 16148
(724) 308–7855
CONTACT: MARK THOMPSON

PROJECT DESCRIPTION

THE PURPOSE OF THIS PROJECT IS TO ENHANCE BROADBAND CONNECTIVITY AND CAPACITY TO THE EXISTING ELIGIBLE WIRELESS FACILITY.

- INSTALL (1) 3'x3'x2" PRECAST PAD
- INSTALL (1) CABINET
- INSTALL (3) ANTENNA
- INSTALL (3) ANTENNA MOUNTS
- INSTALL (3) MICROWAVE W/RADIOS
- INSTALL (3) RRH

THE PARTIES ABOVE HEREBY APPROVE AND ACCEPT THESE DOCUMENTS AND AUTHORIZE THE CONTRACTOR TO PROCEED WITH THE CONSTRUCTION DESCRIBED HEREIN. ALL CONSTRUCTION DOCUMENTS ARE SUBJECT TO REVIEW BY THE LOCAL BUILDING DEPARTMENT AND ANY CHANGES AND MODIFICATIONS THE MAY IMPOSE.

APPLICABLE CODES / REFERENCE DOCUMENTS

ALL WORK AND MATERIALS SHALL BE PERFORMED AND INSTALLED IN ACCORDANCE WITH THE CURRENT EDITIONS OF THE FOLLOWING CODES AS ADOPTED BY THE LOCAL GOVERNING AUTHORITIES. NOTHING IN THESE PLANS IS TO BE CONSTRUCTED TO PERMIT WORK NOT CONFORMING TO THE LATEST EDITIONS OF THE FOLLOWING CODES.

- 2018 INTERNATIONAL BUILDING CODE
- 2020 NATIONAL ELECTRIC CODE
- 2018 INTERNATIONAL ENERGY CONSERVATION CODE
- 2018 INTERNATIONAL FIRE CODE
- 2018 INTERNATIONAL MECHANICAL CODE
- 2018 INTERNATIONAL RESIDENTIAL CODE

CALL WASHINGTON ONE CALL
(800) 424-5555
CALL 3 WORKING DAYS
BEFORE YOU DIG!

PLANS PREPARED FOR:

PLANS PREPARED BY:

T-SQUARED SITE SERVICES
2501 SHENANGO VALLEY FREEWAY
SUITE 3
HERMITAGE, PA 16148
724.308.7855
www.t-sqrd.com

COPYRIGHT © 2023 T-SQUARED SITE SERVICES, LLC

ENGINEERING LICENSE & SEAL:

CRAIG ANDREWS RUSSO
STATE OF WASHINGTON
19110342
REGISTERED
PROFESSIONAL ENGINEER

THESE DOCUMENTS ARE CONFIDENTIAL AND ARE THE SOLE PROPERTY OF NEW J AND MAY NOT BE REPRODUCED, DISSEMINATED OR REDISTRIBUTED WITHOUT THE EXPRESS WRITTEN CONSENT OF NEW J.

REVISIONS:

DESCRIPTION	DATE	BY	REV
FINAL CDS	08.25.23	TM	1
ISSUED FOR REVIEW	08.21.23	TM	0

PROJECT INFO

SITE ID# : SPC007

SITE NAME:
COE ROAD

S. COE ROAD
SPOKANE, WA

PROPOSED
160' SELF-SUPPORT

TITLE SHEET

SHEET NUMBER: T-1

REV.: 1

69009

GENERAL NOTES:

1. CONTRACTOR WILL PROVIDE ALL LABOR, MATERIALS, TOOLS, EQUIPMENT, SAFETY EQUIPMENT, TRANSPORTATION, AND SERVICES NECESSARY TO COMPLETE ALL THE WORK OUTLINED IN ALL THE DRAWINGS, SPECIFICATIONS, SCOPES OF WORK, BILL OF MATERIALS, AND ANY OTHER DOCUMENT ISSUED BY NEW J.

2. THE CONTRACTOR SHALL COMPLY WITH ALL LOCAL AND NATIONAL CODES, LAWS, ORDINANCES, REGULATIONS, SAFETY REGULATIONS, ALL OSHA REGULATIONS, ALL PUBLIC AND MUNICIPAL AUTHORITIES, AND ANY UTILITY COMPANIES REGULATIONS AND DIRECTIVES.

3. ALL MATERIALS SUPPLIED BY THE OWNER, OWNER'S REPRESENTATIVE, AND THE CONTRACTOR, SHALL BE INSTALLED IN ACCORDANCE WITH ALL LOCAL AND NATIONAL CODES, LAWS, ORDINANCES, REGULATIONS AND PER MANUFACTURER'S RECOMMENDATIONS.

4. ANY CONTRACTOR SUBMITTING BIDS ON ANY OF THE WORK IS REQUIRED TO VISIT EACH SITE PRIOR TO THE BID SUBMITTAL AND FAMILIARIZE HIMSELF/HERSELF WITH THE EXISTING CONDITIONS AND UNDERSTAND THE SCOPE OF WORK INTENDED FOR THE PROJECT. THIS WILL BE PERFORMED AT THE CONTRACTOR'S EXPENSE.

5. THE DRAWINGS AND SPECIFICATIONS ARE A GENERAL DIRECTIVE FOR THE SCOPE OF WORK. EXACT DIMENSIONS AND LOCATIONS MAY CHANGE IN THE FIELD. THE CONTRACTOR IS TO VERIFY THE DIMENSIONS AND LOCATIONS AND REPORT ANY AND ALL DISCREPANCIES TO THE OWNER'S REPRESENTATIVE PRIOR TO COMMENCING THE RELATED WORK. ANY MINOR ERRORS OR OMISSIONS IN THE DRAWINGS AND SPECIFICATIONS, DOES NOT EXCUSE THE CONTRACTOR FROM COMPLETING THE PROJECT AND IMPROVEMENTS IN ACCORDANCE WITH THE INTENT OF THESE DOCUMENTS.

6. ALL SITES SHALL BE KEPT CLEAN AND FREE OF DEBRIS ON A DAILY BASIS. ALL TRASH AND MATERIALS NO LONGER BEING USED AT THE SITE MUST BE REMOVED AND PROPERLY DISPOSED OF ON A DAILY BASIS. ANY EXCESS MATERIALS WILL BE RETURNED TO THE OWNER'S REPRESENTATIVE AND DELIVERED TO THE WAREHOUSING FACILITY PER THE DIRECTION OF THE OWNER'S REPRESENTATIVE.

7. THE CONTRACTOR SHALL NOT PROCEED WITH ANY WORK AT THE SITE PRIOR TO A NOTICE TO PROCEED (NTP) HAS BEEN ISSUED AND A PRE-CONSTRUCTION MEETING AT THE SITE HAS TAKEN PLACE.

8. ALL WORK AND MATERIALS FURNISHED BY THE CONTRACTOR SHALL HAVE A WRITTEN ONE-YEAR WARRANTY STARTING AT THE ACCEPTANCE OF THE SITE FROM THE OWNER.

9. THE CONTRACTOR SHALL HAVE A DESIGNATED MANAGER ON SITE AT ALL TIMES THAT ANY WORK IS BEING PERFORMED. A SUB-CONTRACTOR IS NOT DEFINED AS A DESIGNATED MANAGER.

10. THE SUCCESSFUL CONTRACTOR SHALL PROVIDE A SCHEDULE LIST OF ALL SUB-CONTRACTORS WITH ADDRESSES, CELL PHONE NUMBERS AND HOME PHONE NUMBERS, VERIFICATION OF INSURANCE, ANY AND ALL PERTINENT LICENSES, AND AN ACCURATE SCHEDULE FOR THE PROJECT PRIOR TO THE ISSUANCE OF AN NTP.

11. THE CONTRACTOR IS TO KEEP A COMPLETE AND UP TO DATE SET OF THE DRAWINGS, SPECIFICATIONS, SCOPE OF WORK, AND BILL OF MATERIAL ON THE SITE AT ALL TIMES. THIS IS WILL BE REFERENCED AS THE AS-BUILT DRAWINGS AND MUST BE KEPT CURRENT ON A DAILY BASIS. THIS IS IN ADDITION TO THE PERMIT SET.

12. A NEW AND CLEAN SET OF CONTRACT DOCUMENTS WILL BE ISSUED TO THE CONTRACTOR NEAR THE COMPLETION OF THE PROJECT TO BE USED TO TRANSFER THE INFORMATION FROM THE FIELD COPY OF AS-BUILD DRAWINGS TO THE NEW COPY. THIS NEEDS TO BE SUBMITTED TO THE OWNER'S REPRESENTATIVE WITH THE CLOSE OUT DOCUMENTS.

13. ON ANY CO-LOCATION SITE, THE CONTRACTOR AND ANY AND ALL ASSIGNS ARE NOT TO USE EXISTING POWER OR TAMPER WITH ANY EQUIPMENT BELONGING TO ANY OTHER CARRIER. FAILURE TO ADHERE TO THIS WILL CAUSE IMMEDIATE DISMISSAL OF THE CONTRACTOR FROM THE PROJECT.

14. THE CONTRACTOR IS RESPONSIBLE FOR SCHEDULING ALL INSPECTIONS AND TESTING REQUIRED FOR EACH PROJECT. A 24-HOUR NOTIFICATION TO THE OWNER'S REPRESENTATIVE IS REQUIRED FOR ALL INSPECTIONS AND TESTING. A FIELD COPY OF ALL INSPECTION AND TESTING REPORTS AS WELL AS TRUCK TICKETS MUST BE SUBMITTED TO THE OWNER'S REPRESENTATIVE WITHIN 24 HOURS OF THE INSPECTION OR TEST.

15. THE CONTRACTOR IS RESPONSIBLE TO VERIFY ALL MATERIAL ISSUED TO THEM AND REPORT ANY SHORTAGES AND DISCREPANCIES TO THE OWNER'S REPRESENTATIVE OF THE TIME OF ISSUANCE. THE CONTRACTOR SHALL STORE THESE MATERIALS PROPERLY, ACCORDING TO THE MANUFACTURER'S RECOMMENDATIONS AND IN A MANNER THAT WILL NOT VOID THE WARRANTY ON ANY ITEM. IF ANY ITEM IS DAMAGED OR UNUSABLE DUE TO IMPROPER HANDLING AND STORAGE, THE CONTRACTOR WILL REPLACE IT AT THEIR EXPENSE.

16. THE CONTRACTOR IS RESPONSIBLE TO FURNISH PROPER FACILITIES FOR THE WORKERS ON EACH PROJECT FOR THE DURATION OF THAT PROJECT.

17. THE CONTRACTOR IS RESPONSIBLE TO MAINTAIN THE PRESENT CONDITION OF ANY EXISTING BUILDINGS, LANDSCAPING, FENCING, EQUIPMENT, WALKS, DRIVES, AND ATTACHMENTS. IF ANY DAMAGE SHOULD OCCUR, THE CONTRACTOR IS RESPONSIBLE TO RESTORE THE DAMAGE TO A BETTER OR NEW CONDITION.

18. THE CONTRACTOR IS TO PROVIDE PORTABLE TOILET FACILITIES FOR DURATION OF THE CONSTRUCTION PROCESS. TOILET IS TO BE REMOVED FROM SITE WITHIN FIVE BUSINESS DAYS OF COMPLETION OF CONSTRUCTION.

SITE WORK:

1. THE CONTRACTOR SHALL GRUB THE SITE AREA AND ANY ACCESS ROAD CLEARING AND REMOVING A MINIMUM OF 6" TO ACHIEVE A STABLE SUB-BASE TO ACCEPT FILL OR OTHER MATERIAL SPECIFIED FOR THE SITE AND ACCESS ROAD. THE GRUBBING SHALL BE REMOVED FROM THE SITE AND NOT REUSED IN ANY PART OF THIS PROJECT.

2. IT IS THE CONTRACTOR'S SOLE RESPONSIBILITY TO CALL THE LOCAL LOCATING AUTHORITIES TO VERIFY THE LOCATION OF ANY UNDERGROUND UTILITIES OR LINES THAT EXIST WITHIN THE ENTIRE PROJECT AREA. THE CONTRACTOR SHALL PLACE THESE ITEMS ON THE AS-BUILD DRAWINGS.

3. IF LANDSCAPING IS REQUIRED, SUBMIT TWO COPIES OF THE LANDSCAPE PLAN UNDER NURSERY LETTERHEAD TO THE OWNER'S REPRESENTATIVE. IF A LANDSCAPE ALLOWANCE IS INCLUDED, PROVIDE A LIST OF PROPOSED ITEMS AS WELL AS A LANDSCAPE PLAN ON NURSERY LETTERHEAD.

4. ALL ROADWORK AND MATERIALS SHALL CONFORM TO ALL STATE AND LOCAL CODES AND IN ACCORDANCE WITH THE DEPARTMENT OF HIGHWAY AND PUBLIC TRANSPORTATION STANDARD SPECIFICATIONS.

5. THE ACCESS ROAD, IF REQUIRED, WILL BE CONSTRUCTED FIRST BEFORE ANY OTHER WORK ON THE SITE IS PERMITTED. BRING THE ROAD TO SUB BASE COURSE TO ALLOW CONSTRUCTION TRAFFIC TO USE THE ROAD FOR THE PROJECT AND COMPLETE THE ROAD AFTER THE CONSTRUCTION OF THE SITE IS SUBSTANTIALLY COMPLETE.

6. ALL SITE AREAS AND ACCESS ROADS ARE TO BE CONSTRUCTED TO HAVE A POSITIVE DRAINAGE FLOW AWAY FORM THE SITE AND EQUIPMENT. ANY DISCREPANCIES IN THE DRAWINGS OR SPECIFICATION MUST BE BROUGHT TO THE ATTENTION OF THE OWNER'S REPRESENTATIVE IMMEDIATELY.

7. ALL ACCESS ROAD AND SITE AREAS WILL HAVE AN UNDERLAYMENT OF MIRAFI-500X, OR EQUAL.

8. A SOIL STERILIZER SHALL BE APPLIED TO ALL GRAVEL SURFACES AND BE AN EPA REGISTERED LIQUID COMPOSITION AND OF PRE-EMERGENCE DESIGN. THE PRODUCT LABEL AND INFORMATION WILL BE GIVEN TO THE OWNER'S REPRESENTATIVE.

9. GRAVEL FILL SHALL BE WELL GRADED HARD DURABLE, NATURAL, SAND AND GRAVEL, FREE FROM ICE AND SNOW, ROOTS, SOD, RUBBISH, AND OTHER DELETERIOUS OR ORGANIC MATTER. MATERIAL SHALL CONFORM TO THE FOLLOWING GRADATION REQUIREMENTS:

SIEVE NO.	% PASSING BY WEIGHT
4"	100
1/2"	50-85
#4	40-75
#10	30-60
#40	10-30
#100	5-20
#200	0-8

10. ALL FILL DIRT SHALL BE CLEAN AND NATURAL, FREE FROM ANY DELETERIOUS MATERIALS, ROOTS, ICE, SNOW, SOD, AND RUBBISH. A COPY OF ALL DELIVERY TICKETS WILL BE SUBMITTED TO THE OWNER'S REPRESENTATIVE WITHIN 24 HOURS FROM THE DELIVERY.

11. ALL TRENCHES SHALL HAVE A SIX-INCH BASE OF CLEAN SAND FILL TO ACCEPT THE CONDUITS AND THEN ANOTHER 12" OF CLEAN SAND FILL ON TOP OF THE CONDUITS. THE REMAINDER OF THE TRENCH SHALL HAVE A CLEAN COMPACTABLE FILL PLACED IN MAXIMUM LIFTS OF 8" AND MECHANICALLY COMPACTED TO A DENSITY OF 95%. METALLIC WARNING TAPE SHALL BE PLACED AT 12" BELOW FINISHED GRADE ALONG THE ENTIRE TRENCH.

12. ALL COMPACTION OF SITE AREAS SHALL BE ACCOMPLISHED BY MECHANICAL MEANS. LARGER AREAS SHALL BE COMPACTED BY A SHEEP'S FOOT VIBRATORY ROLLER WEIGHTING AT LEAST 5 TONS. SMALLER AREAS SHALL BE COMPACTED BY A POWER DRIVEN HAND HELD TAMPER. ALL COMPACTED AREAS SHALL BE COMPACTED TO WITHIN 95%.

13. ANY FILL OR STONE WILL BE PLACED IN MAXIMUM 8" LIFTS PRIOR TO COMPACTING.

14. FINISH GRADE, INCLUDING TOP SURFACE COURSE, SHALL EXTEND A MINIMUM OF 12" BEYOND THE SITE FENCE AND SHALL COVER THE AREA AS INDICATED.

15. USE RIPRAP IN ANY AREAS WITH A SLOPE GREATER THAN 2:1, ENTIRE DITCH FOR 6 FEET IN ALL DIRECTIONS AT CULVERT OPENINGS, AND WHEREVER INDICATED ON PLANS.

16. SEED FERTILIZER, AND STRAW COVER SHALL BE APPLIED TO ALL OTHER DISTURBED AREAS, DITCHES, DRAINAGE, AND SWALES NOT OTHERWISE RIPRAPPED. SEED AND FERTILIZER SHALL BE APPLIED TO SURFACE CONDITIONS, WHICH WILL ENCOURAGE ROOTING. PREPARE SURFACE PROPERLY TO ACCEPT THE SEEDS. SOW SEEDS IN TWO OPPOSITE DIRECTIONS IN TWICE THE QUANTITY RECOMMENDED BY THE SEED PRODUCER.

17. THE CONTRACTOR IS RESPONSIBLE TO ENSURE GROWTH OF THE SEEDED AND LANDSCAPED AREAS BY WATERING, STRAW, MULCH NET AND ANY OTHER PROPER LANDSCAPING METHOD NECESSARY. ALL AREAS MUST HAVE SUSTAINED GROWTH BY THE TIME OF THE COMPLETION OF THE PROJECT.

18. THE CONTRACTOR SHALL PROTECT ALL AREAS FROM WASHOUTS AND SOIL EROSION. STRAW BALES SHALL BE PLACED AT THE INLET APPROACH TO ALL NEW OR EXISTING CULVERTS.

19. IT IS THE CONTRACTOR'S RESPONSIBILITY TO SUPPLY ON-SITE RESTROOM FACILITIES FOR THE DURATION OF CONSTRUCTION PROGRESS.

CONCRETE:

1. ALL MATERIALS, LABOR, AND METHODS SHALL CONFORM TO ALL APPLICABLE ASTM AND ACI STANDARDS AND REQUIREMENTS. IT IS THE CONTRACTOR'S RESPONSIBILITY TO INSURE THAT ALL STANDARDS ARE MET AND BE ABLE TO PRODUCE THE VERIFICATION OF THESE ITEMS UPON REQUEST.

2. THE CONTRACTOR SHALL SCHEDULE ALL INSPECTIONS AND THE TESTING LABORATORY AND INFORM THE OWNER'S REPRESENTATIVE WITHIN 24 HOURS OF THE INSPECTION OR TEST. THE TEST WILL INCLUDE SLUMP, AIR ENTRAINMENT, TEMPERATURE, AND TEST CYLINDERS. A TOTAL OF FIVE CYLINDERS SHALL BE TAKEN DURING EACH POUR OR FOR EACH 50 YARDS IF THE POUR IS OVER 50 YARDS. THE FIRST CYLINDER WILL BE BROKEN AT 3-1/2 DAYS, A SECOND AT 7 DAYS, A THIRD AT 14 DAYS AND A FOURTH AT 28-DAYS. THE LAST CYLINDER WILL BE KEPT SEPARATELY FOR FUTURE USE IF NECESSARY.

3. ALL CONCRETE FOR THE PROJECT SHALL HAVE A 28-DAY STRENGTH OF 4,000 PSI AND A SLUMP OF 5" MAXIMUM WITH THE MIXTURE PROPORTIONS MEETING THE ASTM AND ACI REQUIREMENTS. ALL ADMIXTURES AND MEETING THE ASTM AND ACI REQUIREMENTS. ALL ADMIXTURES AND MATERIALS USED FOR THE CONCRETE MIXTURE SHALL ALSO CONFORM TO THE PROPER ASTM REQUIREMENTS.

4. THE CONTRACTOR WILL INSTRUCT THE CONCRETE SUPPLIER TO HAVE AN APPROVED PLASTICIZER ON THE TRUCK TO AID IN THE POURING AND PLACING OF PIERS AND FOUNDATIONS.

5. AIR ENTRAINING AGENT SHALL BE USED IN ANY CONCRETE EXPOSED TO FREEZING TEMPERATURES.

6. THE CONTRACTOR IS RESPONSIBLE FOR ALL EMBEDMENT LOCATIONS, SIZES, AND PROPER ANCHORING TO HOLD THE ITEMS IN PLACE ACCURATELY.

7. THE CONTRACTOR WILL SUPPLY AND USE A RELEASING AGENT ON ALL FORMS. ANY ATTACHMENT TO EXISTING CONCRETE AREAS WILL BE DONE WITH SMOOTH DOWELS AT 18" O/C WITH A MINIMUM 6" EMBEDMENT IN EACH DIRECTION AND AN APPROVED BONDING AGENT TO BE APPLIED TO THE EXISTING SURFACE.

8. ALL EXPOSED CONCRETE WILL HAVE A UNIFORM FINISH AND BE SLOPED FOR DRAINAGE OFF THE SURFACE UNLESS OTHERWISE NOTED IN THE PLANS OR SPECIFICATIONS.

9. THE CONTRACTOR SHALL PROTECT THE CONCRETE FROM ANY ADVERSE WEATHER CONDITIONS; PREMATURE DRYING AND MECHANICAL INJURY IN INSURE PROPER CURING.

10. THE CONTRACTOR SHALL BE RESPONSIBLE FOR THE USE AND CONTROL OF ANY MECHANICAL EQUIPMENT TO INSURE THE PROPER PLACEMENT OF THE CONCRETE TO PREVENT ANY VOIDS OR GAPS.

METALS:

1. ALL LABOR, MATERIALS, FABRICATION AND WORKMANSHIP SHALL CONFORM TO CODES AND STANDARDS OF ASTM AN AWS.

2. ALL WORK SHALL BE DONE BY A CERTIFIED WELDER. THE CONTRACTOR SHALL SUBMIT A COPY OF THE CERTIFICATION TO THE OWNER'S REPRESENTATIVE.

3. ALL STEEL USED SHALL BE HOT DIPPED GALVANIZED.

SAFETY BARRIERS AND SIGNAGE:

1. FCC RULES AND REGULATIONS MAY REQUIRE ROUTINE ENVIRONMENT EVALUATIONS OF WIRELESS FACILITIES TO VERIFY RADIO FREQUENCY EMISSIONS COMPLIANCE. IF NEW J'S FACILITY IS DETERMINED TO REQUIRE ADDITIONAL ACTIONS SUCH AS THE INSTALLATION OF SIGNAGE AND/OR THE ERECTION OF BARRIERS TO INFORM WORKERS AND THE PUBLIC ABOUT THE ANTENNAS AND EMISSIONS, AS OUTLINED BY FCC REGULATIONS ON RF EMISSIONS (47 CFR 1.1307(B)), THEN NEW J SHALL PROVIDE ADEQUATE NOTIFICATION TO THE LANDLORD/MANAGER.

PLANS PREPARED FOR:

new j

PLANS PREPARED BY:

T-SQUARED SITE SERVICES
2501 SHENANGO VALLEY FREEWAY
SUITE 3
HERMITAGE, PA 16148
724.308.7855
www.t-sqrd.com

COPYRIGHT © 2023 T-SQUARED SITE SERVICES, LLC

ENGINEERING LICENSE & SEAL:

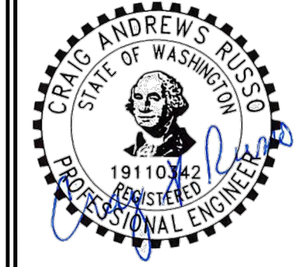

THESE DOCUMENTS ARE CONFIDENTIAL AND ARE THE SOLE PROPERTY OF NEW J AND MAY NOT BE REPRODUCED, DISSEMINATED OR REDISTRIBUTED WITHOUT THE EXPRESS WRITTEN CONSENT OF NEW J.

REVISIONS:

DESCRIPTION	DATE	BY	REV
FINAL CDS	08.25.23	TM	1
ISSUED FOR REVIEW	08.21.23	TM	0

PROJECT INFO

SITE ID# : SPC007

SITE NAME:
COE ROAD

S. COE ROAD
SPOKANE, WA

PROPOSED
160' SELF-SUPPORT

GENERAL NOTES

SHEET NUMBER: GN-1

REV.: 1

69009

ELECTRICAL:

1. THE CONTRACTOR IS RESPONSIBLE FOR ALL PERMITTING, FILING, AND FEES IN CONJUNCTION WITH THE PROJECT.
2. THE CONTRACTOR SHALL SCHEDULE ALL NECESSARY INSPECTIONS WITH THE PROPER AUTHORITIES AND INFORM THE OWNER'S REPRESENTATIVE 24–HOURS IN ADVANCE. ALL TICKETS AND INSPECTION VERIFICATIONS WILL BE SUBMITTED TO THE OWNER'S REPRESENTATIVE WITHIN 24–HOURS AFTER THE INSPECTION HAS TAKEN PLACE.
3. ALL LABOR AND MATERIAL SHALL CONFORM TO ALL LOCAL, STATE AND NATIONAL CODES, RULES, REGULATIONS, AND STANDARDS.
4. ALL EQUIPMENT, WIRING, AND MATERIALS MUST HAVE A UL LABEL.
5. ALL WORK SHALL BE DONE BY QUALIFIED AND EXPERIENCED JOURNEYMEN AND PERFORMED IN A WORKMANLIKE MANNER AND SHALL PROCEED IN AN ORDERLY MANNER SO AS NOT TO HOLD UP THE PROGRESS OF THE PROJECT.
6. THOROUGHLY TEST ALL LINES, FEEDERS, EQUIPMENT, AND DEVICES WITH MAXIMUM LOADS TO ASSURE PROPER OPERATION.
7. CONDUITS AND FITTINGS FOR OUTSIDE APPLICATIONS SHALL BE RIGID OR NON–METALLIC UNLESS OTHERWISE NOTED. CONDUITS AND FITTINGS FOR INSIDE BUILDING RUNS ABOVE CEILINGS SHALL BE EMT. SUPPORT ALL CONDUITS WITHIN 3 FEET OF ALL JUNCTION BOXES AND AT 8–FOOT INTERVALS OR LESS AS NEEDED WITH APPROVED ANCHORING DEVICES.
8. ALL WIRES SHALL BE COPPER; USE OF ALUMINUM CONDUCTORS WILL NOT BE PERMITTED. SEE ELECTRICAL PLANS FOR SIZING AND LOCATIONS. USE PROPER SIZE CONNECTORS PER THE LOCAL, STATE, AND NATIONAL CODES.
9. CONDUCTOR LENGTHS SHALL BE CONTINUOUS FROM TERMINATION TO TERMINATION WITHOUT SPLICES.
10. PROVIDE PULL BOXES WHERE SHOWN AND WHERE REQUIRED BY CODES AND UTILITY COMPANIES.
11. ALL CONDUIT ROUGH IN SHALL BE COORDINATED WITH THE MECHANICAL EQUIPMENT TO AVOID LOCATION CONFLICTS. CONTRACTOR SHALL VERIFY ALL LOCATIONS.
12. ALL WIRES SHALL BE TAGGED AT ALL PULL BOXES, J–BOXES, EQUIPMENT BOXES, AND CABINETS WITH APPROVED PLASTIC TAGS.
13. ALL BREAKERS IN PANEL BOXES SHALL BE IDENTIFIED WITH TYPE WRITTEN LABELS NEATLY PLACED ALONG SIDE OF THE BREAKER.
14. ALL GROUND BUS PLATES SHALL BE ¼"x4"x20" AND SHALL BE TINNED COPPER AND LARGE ENOUGH TO ACCOMMODATE THE REQUIRED NUMBER OF GROUNDING CONNECTIONS. THE HARDWARE SECURING THE MGB, AND ALL LOWER BUS BARS, SHALL INSULATE THEM FROM ANY STRUCTURE TO WHICH THEY ARE FASTENED (IF APPLICABLE).
15. ANY PENETRATIONS THROUGH WALLS, CEILINGS, FLOORS, ROOFS OR ANY OTHER SURFACE SHALL BE CORE DRILLED AND CLOSED WITH A UL RATED FIRE SAFING ASSEMBLY. IF A FIRE RATING IS NOT REFERRED TO ON THE DRAWINGS, THEN THE CONTRACTOR SHALL ASSUME A 2–HOUR RATING.
16. THE MATERIALS AND EQUIPMENT INFORMATION ON THESE DRAWINGS IS BASED ON THE BEST AVAILABLE INFORMATION AT THE TIME THAT THE DRAWINGS WERE ISSUED. CHANGES MAY OCCUR AND THE CONTRACTOR SHALL VERIFY ALL ITEMS PRIOR TO PLACEMENT AND MAKE ANY CORRECTIONS WITHOUT FURTHER COST TO THE OWNER.
17. ALL UNDERGROUND CONDUITS SHALL BE AS CALLED OUT WITHIN THESE DRAWINGS AND SWEEPS OR BENDS AND ABOVE GROUND CONDUITS SHALL BE RIGID GALVANIZED STEEL. ALL CONDUITS NOT TERMINATING INTO A CLOSED AREA MUST BE SEALED TO PREVENT ENTRY OF ANY MOISTURE OR FOREIGN OBJECTS.

UTILITIES:

1. ALL UTILITIES SHALL BE ROUTED UNDERGROUND ACCORDINGLY AND COMPLY WITH ALL PROPER CODING.

GROUNDING:

1. THE CONTRACTOR SHALL VERIFY WITH THE OWNER'S REPRESENTATIVE THAT ALL CONDUIT SYSTEMS, EQUIPMENT, DEVICES, PANELS, LINES, TRAYS, BRIDGES, PLATFORMS, AND ANY AND ALL ITEMS ARE GROUNDED PROPERLY.
2. THE GROUNDING SYSTEM CONNECTIONS SHALL BE MADE WITH HYGROUND COMPRESSION CONNECTORS BELOW GRADE AND MECHANICAL TWO LUG COMPRESSION CONNECTORS ABOVE GRADE. USE ONLY STAINLESS STEEL SCREWS, BOLTS, WASHERS, AND NUTS FOR FASTENING.
3. CLEAN SURFACES THOROUGHLY BEFORE APPLYING GROUND LUGS OR CLAMPS. IF SURFACE IS COATED, THE COATING MUST BE REMOVED DOWN TO THE BARE METAL. AFTER THE COATING HAS BEEN REMOVED, APPLY A NON–CORROSIVE APPROVED COMPOUND TO THE CLEANED SURFACE AND INSTALL LUGS OR CLAMPS. WHERE GALVANIZING IS REMOVED FROM METAL, IT SHALL BE PAINTED OR TOUCHED UP WITH COLD GALVANIZING PAINT SUCH AS GLAVMOX OR EQUAL.
4. ALL CLAMPS, SLEEVES, AND SUPPORTS USED TO SUPPORT OR CHANNEL THE GROUNDING SYSTEM CONDUCTORS AND PVC CONDUITS SHALL BE PVC TYPE NON–CONDUCTIVE. DO NOT USE METAL BRACKETS OR SUPPORTS, WHICH WOULD FORM A COMPLETE RING AROUND ANY GROUNDING CONDUCTOR.
5. ALL GROUNDING CONNECTIONS SHALL BE COATED WITH AN ANTI–CORROSIVE AGENT SUCH AS T&B KOPR SHIELD, NO–OXY, NOALOX, PENETROX OR EQUAL. VERIFY THE PRODUCT WITH THE OWNER'S REPRESENTATIVE PRIOR TO USAGE.
6. GROUND THE H–FRAME AND ANY OTHER METALLIC COMPONENTS WITH #2 GROUNDING CONDUCTORS AND CONNECT TO THE INSULATED SURFACE MOUNTED GROUND BARS UNLESS OTHERWISE NOTED IN CONSTRUCTION DRAWINGS. CONNECTION DETAILS TO BE PERFORMED PER THE MANUFACTURER'S SPECIFICATIONS AND RECOMMENDATIONS.
7. IF NEEDED, THE ANTENNA CABLES SHALL BE GROUNDED AT THE TOP AND BOTTOM OF THE VERTICAL RUN FOR LIGHTNING PROTECTION. THE ANTENNA CABLE SHIELD SHALL BE BONDED TO A COPPER GROUND BUS AT THE LOWERMOST POINT OF A VERTICAL RUN JUST BEFORE IT BEGINS TO BEND TOWARD THE HORIZONTAL PLANE. WIRE RUNS TO GROUND SHALL BE KEPT AS STRAIGHT AND SHORT AS POSSIBLE. THE ANTENNA CABLE SHIELD SHALL BE GROUNDED JUST BEFORE ENTERING THE CELL CABINET. ANY ANTENNA CABLES OVER 200 FEET IN LENGTH SHALL ALSO BE EQUIPPED WITH ADDITIONAL GROUNDING AT MIDPOINT.
8. THE CONTRACTOR, UPON COMPLETION OF THE GROUNDING SYSTEM, SHALL SCHEDULE A TEST OF THE SYSTEM WITH AN INDEPENDENT LABORATORY AS SELECTED BY THE OWNER. THE OWNER'S REPRESENTATIVE WILL BE INFORMED 24–HOURS IN ADVANCE OF THE TEST.
9. STORE REDLINED DRAWINGS ON SITE AT ALL TIMES IN CAPPED PVC CONDUIT
10. CONTRACTOR TO PROVIDE PHOTO'S OF ANTENNA INSTALL (PUNCHLIST ITEMS) AT TIME OF PUNCHWALK.
11. CONTRACTOR TO PERFORM PRE AND POST GROUNDING TEST FROM NEW J TEST WELL TO NEW J TEST WELL. NEW J TO PROVIDE MOST RECENT OHM TEST.
12. GROUND TEST TO BE PERFORMED AFTER INSTALLATION OF EQUIPMENT. CONNECTION TO GROUND RING MUST BE LESS THAN OR EQUAL TO 5 OHMS.

STRUCTURAL:

1. ALL MATERIALS, LABOR, AND METHODS SHALL CONFORM TO ALL APPLICABLE ASTM AND ACI STANDARDS AND REQUIREMENTS. IT IS THE CONTRACTOR'S RESPONSIBILITY TO INSURE THAT ALL STANDARDS ARE MET AND BE ABLE TO PRODUCE THE VERIFICATION OF THESE ITEMS UPON REQUEST.
2. ALL EQUIPMENT SHALL BE INSTALLED PLUMB AND LEVEL.
3. ALL STRUCTURAL STEEL SHALL BE FABRICATED AND ERECTED IN ACCORDANCE WITH THE LATEST AISC CODE AND ASTM SPECIFICATION. STEEL SHALL CONFORM TO ASTM A992 FOR W–MEMBERS, ASTM A36 FOR M, S, C, MC, AND L MEMBERS, ASTM A500 GR. B FOR HSS MEMBERS, AND ASTM A53 GR.B FOR PIPES.
4. ALL CONNECTION OF STRUCTURAL STEEL MEMBERS SHALL BE MADE USING SPECIFIED WELDS WITH WELDING ELECTRODES E–70XX OR SPECIFIED HIGH STRENGTH BOLTS TO BE ASTM A325, THREAD EXCLUDED FROM SHEAR PLANE.
5. ALL STEEL EXPOSED TO MOISTURE, SHALL BE HOT DIPPED GALVANIZED AFTER FABRICATION PER ASTM A–123.
6. ALL DAMAGED SURFACES, WELDED AREAS AND AREAS AUTHORIZED NON–GALVANIZED MEMBERS OR PARTS (EXISTING OR NEW) SHALL BE PAINTED WITH 2 COATS OF ZRC COLD GALVANIZING COMPOUND MANUFACTURED BY ZRC CHEMICAL PRODUCTS CO. OR USE THERMAL SPRAYING WITH PLATTZINC 85/15 AS MANUFACTURED BY PLATT.
7. ALL SHOP AND FIELD WELDING SHALL BE DONE BY WELDERS QUALIFIED AS DESCRIBED IN THE "AMERICAN WELDING SOCIETY'S STANDARD QUALIFICATION PROCEDURE" TO PERFORM THE TYPE OF WORK REQUIRED.
8. CONTRACTOR SHALL MEASURE AND VERIFY ALL EXISTING CONDITIONS AND DIMENSIONS IN FIELD. ANY UNUSUAL CONDITIONS SHALL BE BROUGHT TO THE ATTENTION OF THE ARCHITECT AND ENGINEER PRIOR TO THE PURCHASE, FABRICATION AND ERECTION OF ANY MATERIAL.
9. INCORRECTLY FABRICATED, DAMAGED, OTHERWISE MIS–FITTING, OR NON–CONFORMING MATERIALS AND CONDITIONS SHALL BE REPORTED TO THE OWNER, ENGINEER, AND CONSTRUCTION MANAGER PRIOR TO ANY REMEDIAL OR CORRECTIVE ACTION. ALL ACTIONS SHALL REQUIRE THE APPROVAL OF THE OWNER.
10. CONTRACTOR SHALL EXECUTE ALL WORK PREVENTING ANY DAMAGE TO EXISTING STRUCTURES, ESPECIALLY TO THE ROOF. ANY ROOF WORK INVOLVING ATTACHMENT, REMOVAL OF FINISH SURFACE OR PENETRATION SHALL BE PERFORMED TO PRESERVE EXISTING ROOFING GUARANTEES AND WARRANTIES. ROOF SHALL BE RESTORED TO COMPLETE WATER TIGHTNESS WITH THE APPROVED MATERIAL AND BY A SUB CONTRACTOR PRE–APPROVED BY THE OWNER IN WRITING.
11. MASONRY PENETRATIONS SHOULD USE ROTARY ACTION ONLY. (NO HAMMERING ACTION)
12. ALL PENETRATIONS TO BE PROPERLY FIRE–STOPPED WITH 3M F.S.195 WRAP STRIP FIRE STOP AND C925 NON–SHRINKING PUTTY FIRE BARRIER SEALANT. MAINTAIN FIRE RATING OF ALL PENETRATED SURFACES.
13. ALL MOUNTS TO WALLS TO BE SEALED AT TOP AND SIDES WITH DOW CORNING CLEAR SILICONE SEALANT OR APPROVED EQUAL. SILICONE APPLICATIONS ARE TO BE TOOLED TO MAINTAIN A FINISHED APPEARANCE.
14. CONTRACTOR SHALL PROMPTLY REMOVE ANY AND ALL DEBRIS FROM SITE.

PLANS PREPARED FOR:

new j

PLANS PREPARED BY:

T-SQUARED SITE SERVICES
2501 SHENANGO VALLEY FREEWAY
SUITE 3
HERMITAGE, PA 16148
724.308.7855
www.t-sqrd.com

COPYRIGHT © 2023 T-SQUARED SITE SERVICES, LLC

ENGINEERING LICENSE & SEAL:

CRAIG ANDREWS RUSSO
STATE OF WASHINGTON
19110342
REGISTERED
PROFESSIONAL ENGINEER

THESE DOCUMENTS ARE CONFIDENTIAL AND ARE THE SOLE PROPERTY OF NEW J AND MAY NOT BE REPRODUCED, DISSEMINATED OR REDISTRIBUTED WITHOUT THE EXPRESS WRITTEN CONSENT OF NEW J.

REVISIONS:

DESCRIPTION	DATE	BY	REV
FINAL CDS	08.25.23	TM	1
ISSUED FOR REVIEW	08.21.23	TM	0

PROJECT INFO

SITE ID# : SPC007

SITE NAME:
COE ROAD

S. COE ROAD
SPOKANE, WA

PROPOSED
160' SELF-SUPPORT

GENERAL NOTES

SHEET NUMBER: GN-2

REV.: 1

69009

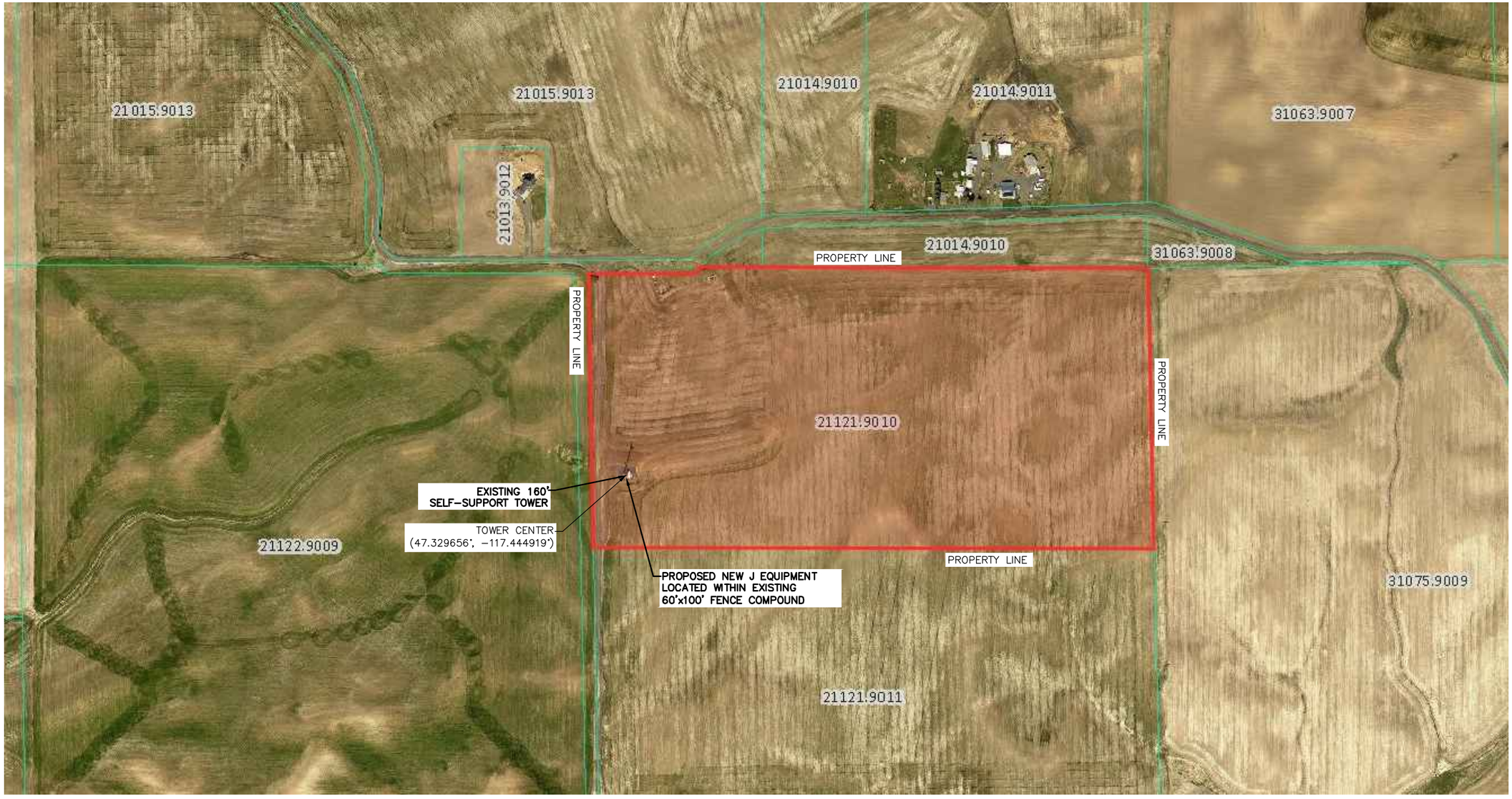

1 SITE PLAN

SCALE: 1"=50'

A

PLANS PREPARED FOR:

new j

PLANS PREPARED BY:

T-SQUARED
SITE SERVICES

2501 SHENANGO VALLEY FREEWAY
SUITE 3
HERMITAGE, PA 16148
724.308.7855
www.t-sqrd.com

COPYRIGHT © 2023 T-SQUARED SITE SERVICES, LLC

ENGINEERING LICENSE & SEAL:

CRAIG ANDREWS RUSSO
STATE OF WASHINGTON
19110142
REGISTERED
PROFESSIONAL ENGINEER

THESE DOCUMENTS ARE CONFIDENTIAL AND ARE THE SOLE PROPERTY OF NEW J AND MAY NOT BE REPRODUCED, DISSEMINATED OR REDISTRIBUTED WITHOUT THE EXPRESS WRITTEN CONSENT OF NEW J.

REVISIONS:

DESCRIPTION	DATE	BY	REV
FINAL CDS	08.25.23	TM	1
ISSUED FOR REVIEW	08.21.23	TM	0

PROJECT INFO

SITE ID# : SPC007

SITE NAME:
COE ROAD

S. COE ROAD
SPOKANE, WA

PROPOSED
160' SELF-SUPPORT

SITE PLAN

SHEET NUMBER: A-1

REV.: 1

69009

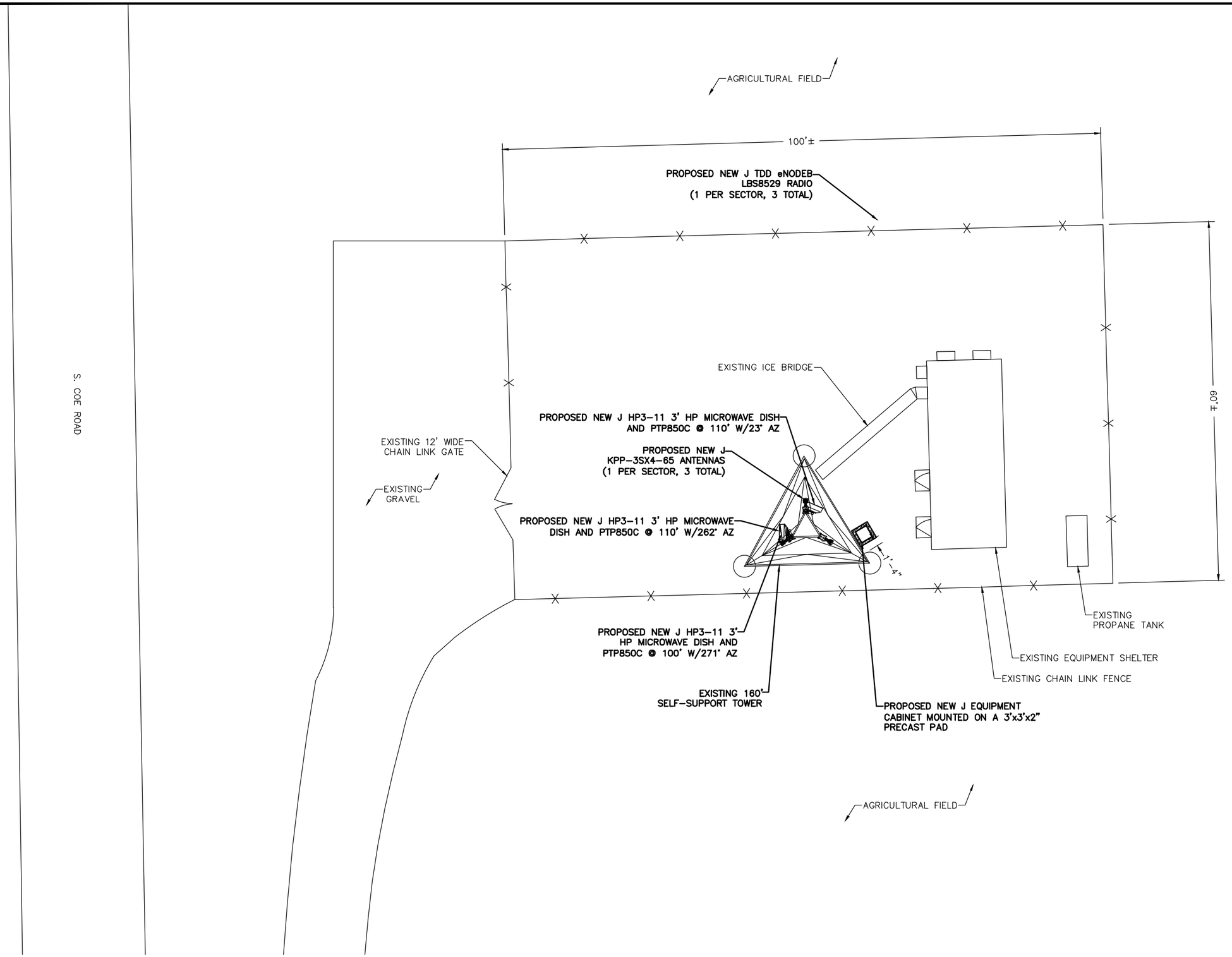

1 ENLARGED SITE PLAN

SCALE: 1/16" = 1'-0"

PLANS PREPARED FOR:

new j

PLANS PREPARED BY:

T-SQUARED SITE SERVICES
2501 SHENANGO VALLEY FREEWAY
SUITE 3
HERMITAGE, PA 16148
724.308.7855
www.t-sqrd.com

COPYRIGHT © 2023 T-SQUARED SITE SERVICES, LLC

ENGINEERING LICENSE & SEAL:

CRAIG ANDREWS RUSSO
STATE OF WASHINGTON
19110342
REGISTERED
PROFESSIONAL ENGINEER

THESE DOCUMENTS ARE CONFIDENTIAL AND ARE THE SOLE PROPERTY OF NEW J AND MAY NOT BE REPRODUCED, DISSEMINATED OR REDISTRIBUTED WITHOUT THE EXPRESS WRITTEN CONSENT OF NEW J.

REVISIONS:

DESCRIPTION	DATE	BY	REV
FINAL CDS	08.25.23	TM	1
ISSUED FOR REVIEW	08.21.23	TM	0

PROJECT INFO

SITE ID# : SPC007

SITE NAME:
COE ROAD

S. COE ROAD
SPOKANE, WA

PROPOSED
160' SELF-SUPPORT

ENLARGED SITE PLAN

SHEET NUMBER: A-2

REV.: 1

69009

NOTE:
AN ANALYSIS OF THE TOWER HAS BEEN PERFORMED BY NORTHWEST TOWER ENGINEERING ON 08/8/2023. THE CONTRACTOR SHALL NOT PROCEED WITH ANY CONSTRUCTION UNTIL REVIEWING THE STRUCTURAL ANALYSIS. IF ANY CHANGES HAVE BEEN MADE, THE CONTRACTOR IS TO CONTACT NORTHWEST TOWER ENGINEERING PRIOR TO INSTALLING EQUIPMENT.

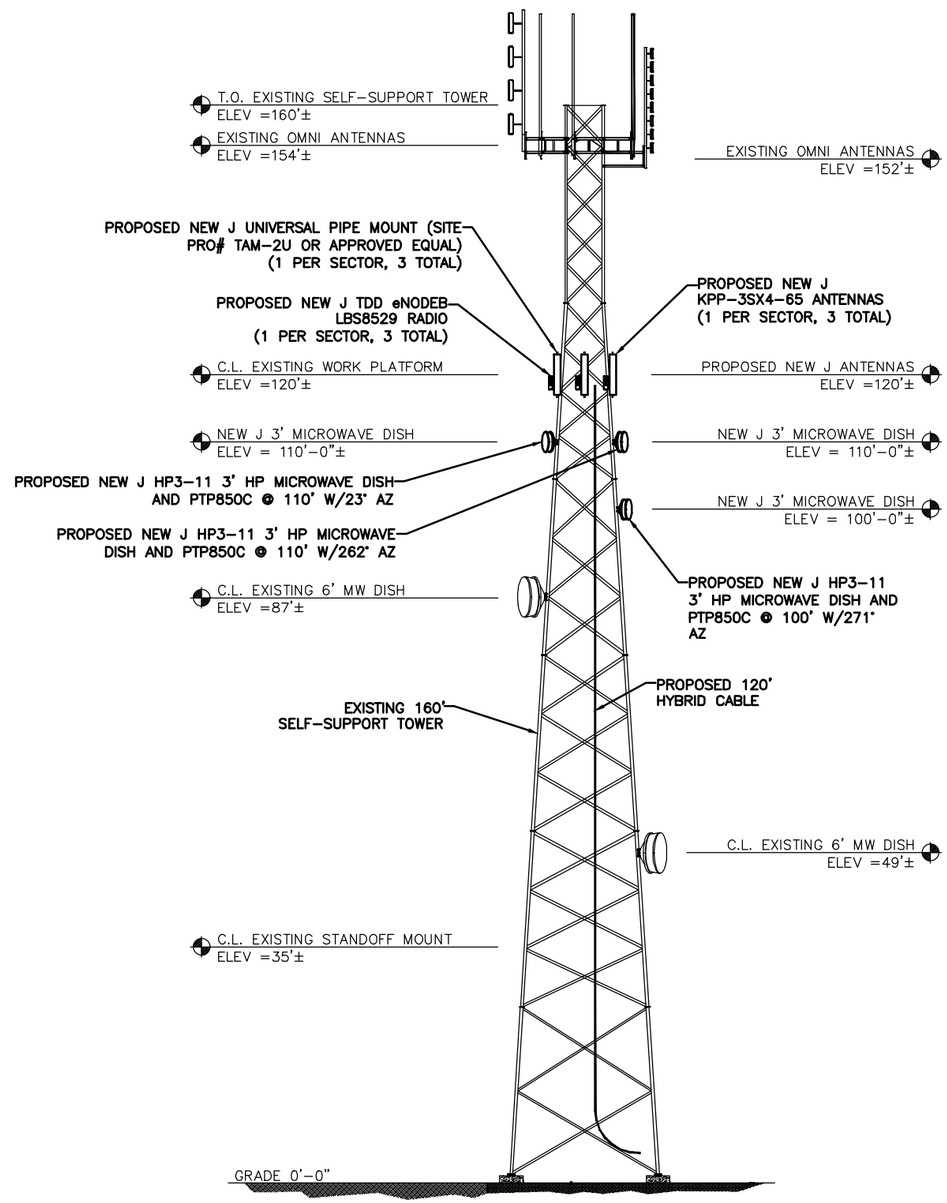

1 ELEVATION
1"=30'

DESIGNED APPURTENANCE LOADING

TYPE	ELEVATION	TYPE	ELEVATION
6' Standoff Mount	154	LBS8529 Radio	120
20' Omni	154	Pipe Mount	120
6' Standoff Mount	154	KP Performance KPP-3SX4-65	120
6' Standoff Mount	154	LBS8529 Radio	120
20' 4-Bay Dipole Antenna	154	Cambium Networks PTP 850C Radio	110
6' Standoff Mount	154	Dish Mount	110
20' Omni	154	Cambium Networks PTP 850C Radio	110
Work Platform w/Handrails	152	Dish Mount	110
Work Platform w/Handrails	152	3' MW HP	110
Work Platform w/Handrails	152	3' MW HP	110
18' 8-Bay Dipole Antenna	152	Cambium Networks PTP 850C Radio	100
Pipe Mount (empty)	150	3' MW HP	100
Work Platform w/Handrails	122	Dish Mount	100
Work Platform w/Handrails	122	6' MW HP	87
Work Platform w/Handrails	122	Dish Mount	87
Pipe Mount	120	Ice Shield	55
KP Performance KPP-3SX4-65	120	6' MW HP	49
LBS8529 Radio	120	Dish Mount	49
Pipe Mount	120	Standoff Mount (empty)	35
KP Performance KPP-3SX4-65	120		

N.T.S.

PLANS PREPARED FOR:

new j

PLANS PREPARED BY:

T-SQUARED SITE SERVICES
2501 SHENANGO VALLEY FREEWAY
SUITE 3
HERMITAGE, PA 16148
724.308.7855
www.t-sqrd.com

COPYRIGHT © 2023 T-SQUARED SITE SERVICES, LLC

ENGINEERING LICENSE & SEAL:

CRAIG ANDREW RUSSO
STATE OF WASHINGTON
19110342
REGISTERED
PROFESSIONAL ENGINEER

THESE DOCUMENTS ARE CONFIDENTIAL AND ARE THE SOLE PROPERTY OF NEW J AND MAY NOT BE REPRODUCED, DISSEMINATED OR REDISTRIBUTED WITHOUT THE EXPRESS WRITTEN CONSENT OF NEW J.

REVISIONS:

DESCRIPTION	DATE	BY	REV
FINAL CDS	08.25.23	TM	1
ISSUED FOR REVIEW	08.21.23	TM	0

PROJECT INFO

SITE ID# : SPC007

SITE NAME:
COE ROAD

S. COE ROAD
SPOKANE, WA

PROPOSED
160' SELF-SUPPORT

ELEVATION

SHEET NUMBER: A-3

REV.: 1

69009

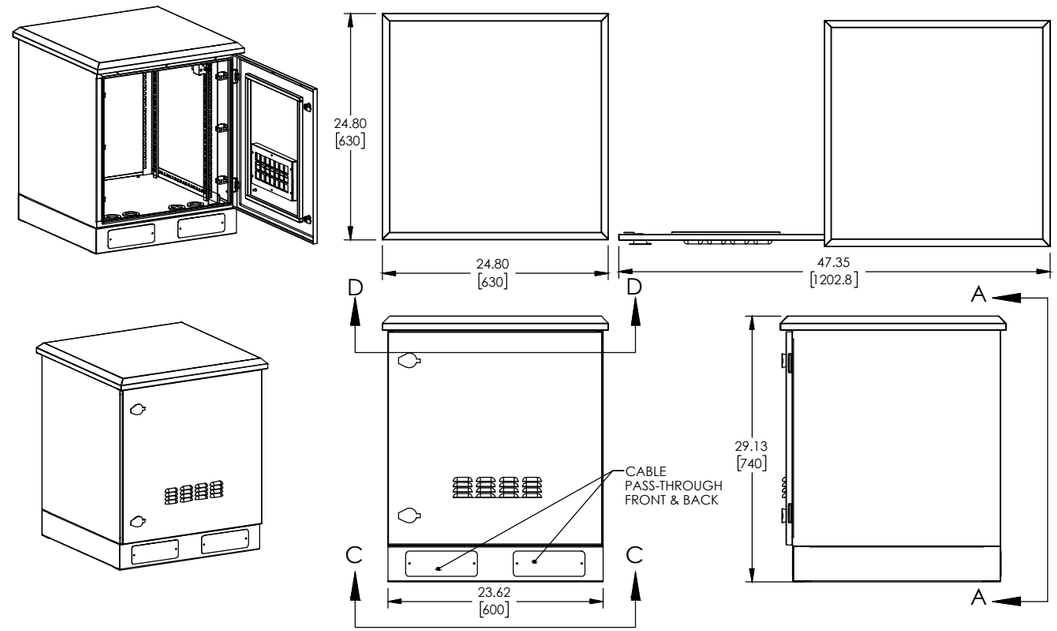

NAVEPOINT OUTDOOR CABINET
(PART # 00406917)

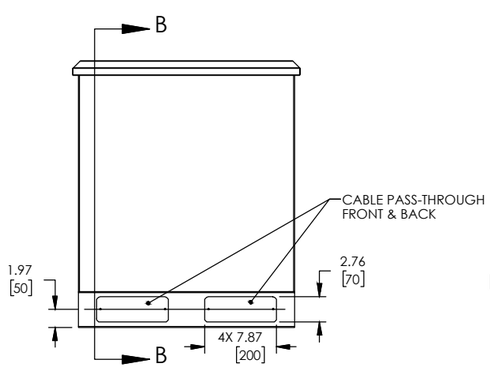

SECTION A-A

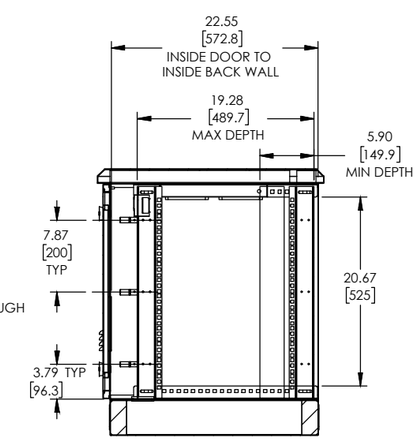

SECTION B-B

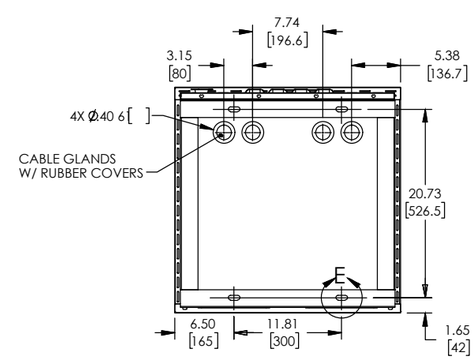

SECTION C-C

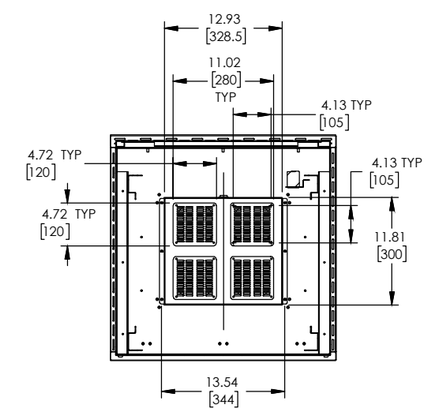

SECTION D-D

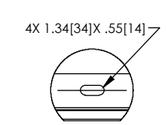

DETAIL E

1 NAVEPOINT OUTDOOR CABINET

PLANS PREPARED FOR:

new j

PLANS PREPARED BY:

T-SQUARED
SITE SERVICES
2501 SHENANGO VALLEY FREEWAY
SUITE 3
HERMITAGE, PA 16148
724.308.7855
www.t-sqrd.com

COPYRIGHT © 2023 T-SQUARED SITE SERVICES, LLC

ENGINEERING LICENSE & SEAL:

CRAIG ANDREWS RUSSO
STATE OF WASHINGTON
19110342
REGISTERED
PROFESSIONAL ENGINEER

THESE DOCUMENTS ARE CONFIDENTIAL AND ARE THE SOLE PROPERTY OF NEW J AND MAY NOT BE REPRODUCED, DISSEMINATED OR REDISTRIBUTED WITHOUT THE EXPRESS WRITTEN CONSENT OF NEW J.

REVISIONS:

DESCRIPTION	DATE	BY	REV
FINAL CDS	08.25.23	TM	1
ISSUED FOR REVIEW	08.21.23	TM	0

PROJECT INFO

SITE ID# : SPC007

SITE NAME:
COE ROAD

S. COE ROAD
SPOKANE, WA

PROPOSED
160' SELF-SUPPORT

EQUIPMENT CABINET

SHEET NUMBER: A-4

REV.: 1

69009

NOTES:
1. CONTRACTOR TO VERIFY PROPOSED ANTENNA AND RRH INFORMATION IS THE MOST CURRENT DATA/RFDS AT TIME OF CONSTRUCTION.
2. CONTRACTOR TO CONFIRM CABLE LENGTHS PRIOR TO CONSTRUCTION.

NOTE:
AN ANALYSIS OF THE TOWER HAS BEEN PERFORMED BY NORTHWEST TOWER ENGINEERING ON 08/8/2023. THE CONTRACTOR SHALL NOT PROCEED WITH ANY CONSTRUCTION UNTIL REVIEWING THE STRUCTURAL ANALYSIS. IF ANY CHANGES HAVE BEEN MADE, THE CONTRACTOR IS TO CONTACT NORTHWEST TOWER ENGINEERING PRIOR TO INSTALLING EQUIPMENT.

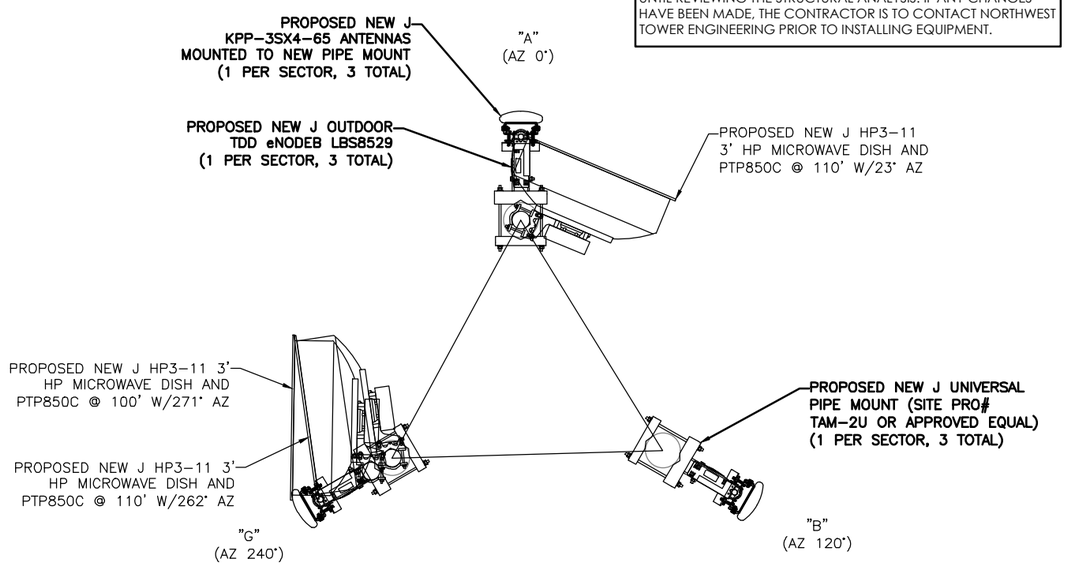

ANTENNA LAYOUT DETAIL
SCALE: N.T.S.

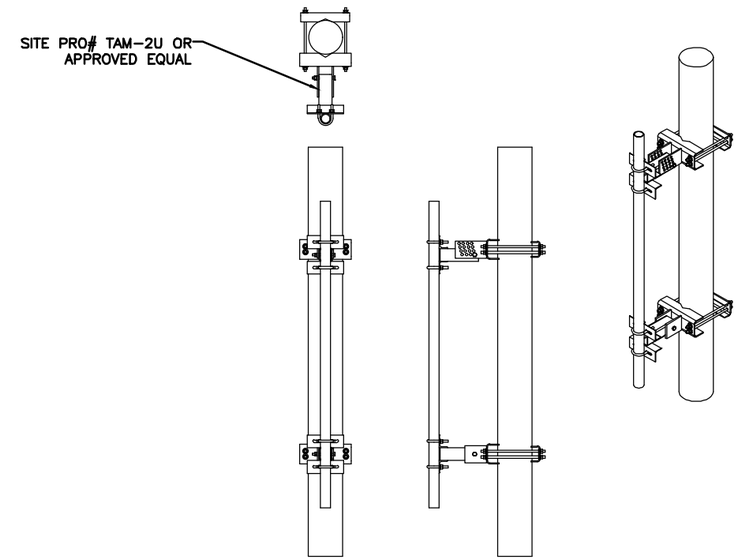

ANTENNA / MW MOUNT DETAIL
SCALE: N.T.S.

FINAL EQUIPMENT SCHEDULE

SECTOR	POS.	ANTENNA MANUFACTURER	ANTENNA MODEL	RAD. CENTER	AZIMUTH	DOWNTILT M	DOWNTILT E	TMA/RRU	FEEDLINE	FEEDLINE LENGTH
ALPHA	1	KP PERFORMANCE	KPP-3SX4-65	120'	0°	0°	0°	(1) TDD eNODEB-LBS8529	(6) 1/2" JUMPER (6) 1/2" HYBRID	130'±
	2	RADIOWAVES	HP3-11	110'	23°	–	–	(1) PTP850C		120'±
	3	–	–	–	–	–	–	–		
	4	–	–	–	–	–	–	–		
	5	–	–	–	–	–	–	–		
BETA	1	KP PERFORMANCE	KPP-3SX4-65	120'	120°	0°	0°	(1) TDD eNODEB-LBS8529		130'±
	2	–	–	–	–	–	–	–		
	3	–	–	–	–	–	–	–		
	4	–	–	–	–	–	–	–		
	5	–	–	–	–	–	–	–		
GAMMA	1	KP PERFORMANCE	KPP-3SX4-65	120'	240°	0°	0°	(1) TDD eNODEB-LBS8529		130'±
	2	RADIOWAVES	HP3-11	100'	23°	–	–	(1) PTP850C		110'±
	3	RADIOWAVES	HP3-11	110'	271°	–	–	(1) PTP850C		120'±
	4	–	–	–	–	–	–	–		
	5	–	–	–	–	–	–	–		

RF SCHEDULE
SCALE: N.T.S.

LEGEND:
M – MECHANICAL
E – ELECTRICAL

PLANS PREPARED FOR:

new j

PLANS PREPARED BY:

T-SQUARED SITE SERVICES
2501 SHENANGO VALLEY FREEWAY
SUITE 3
HERMITAGE, PA 16148
724.308.7855
www.t-sqrd.com

COPYRIGHT © 2023 T-SQUARED SITE SERVICES, LLC

ENGINEERING LICENSE & SEAL:

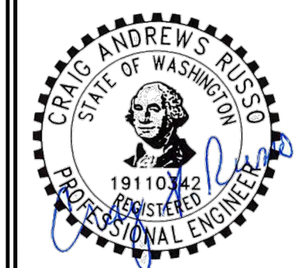

THESE DOCUMENTS ARE CONFIDENTIAL AND ARE THE SOLE PROPERTY OF NEW J AND MAY NOT BE REPRODUCED, DISSEMINATED OR REDISTRIBUTED WITHOUT THE EXPRESS WRITTEN CONSENT OF NEW J.

REVISIONS:

DESCRIPTION	DATE	BY	REV
FINAL CDS	08.25.23	TM	1
ISSUED FOR REVIEW	08.21.23	TM	0

PROJECT INFO

SITE ID# : SPC007

SITE NAME:
COE ROAD

S. COE ROAD
SPOKANE, WA

PROPOSED
160' SELF-SUPPORT

ANTENNA LAYOUT
AND RF SCHEDULE

SHEET NUMBER: A-5

REV.: 1

69009

radiowaves an INFINIT® brand — THE LEADER IN MICROWAVE ANTENNA INNOVATION

0.9 m | 3 ft High Performance Parabolic Reflector Antenna, Single-polarized, 10.7-11.7GHz

HP3-11

The HP High Performance Series by RadioWaves offers a full line of high performance parabolic antennas engineered to provide ETSI class 2/3 radiation pattern performance as well as excellent gain. RadioWaves field-proven pre-assembled antennas and robust pole-mounts ensure "set and forget" installation with minimal post-installation maintenance. The included radome ensures robust and reliable performance under the most challenging conditions. If it's rugged, it must be RadioWaves!

FEATURES AND BENEFITS
O High Performance ETSI Class 2/3* Parabolic Antennas – Excellent performance for a wide range of applications
O Fully Preassembled at the Factory – Simplifies installation on site and guarantees "factory-tested" quality

*ETSI Class depends on frequency band

SPECIFICATIONS

General

Antenna Type	High Performance Parabolic Reflector Antenna
Size, nominal	3 ft | 0.9 m
Polarization	Single

Standard RF Connector Type	CPR90G
Standard RF Connector Suffix	RS (append suffix to model number)

Electrical

Operating Frequency Band	10.7 - 11.7 GHz
Half Power Beamwidth, Horizontal	2.1 degrees
Half Power Beamwidth, Vertical	2.1 degrees
Cross-Polarization Discrimination	30 dB
Front to Back Ratio (F/B)	62 dB

Gain, Low Frequency	38.1 dBi
Gain, Mid Frequency	38.5 dBi
Gain, High Frequency	39 dBi
VSWR	1.37:1
Return Loss	-16.1 dB

© 2023 Infinite Electronics, Inc. RadioWaves is a registered trademark of Infinite Electronics, Inc.
+1 (978) 459-8800 | sales@radiowaves.com | radiowaves.com

radiowaves an INFINIT® brand — THE LEADER IN MICROWAVE ANTENNA INNOVATION

Mechanical

Fine Azimuth Adjustment	+/- 10 degrees
Fine Elevation Adjustment	+/- 10 degrees
Mounting Pipe Diameter, Min	2.5 inch | 5.1 cm
Mounting Pipe Diameter, Max	4.5 inch | 11.4 cm
Net Weight	50 lbs | 12.3 kg
Wind Velocity Operational	90 mph | 145 km/h
Wind Velocity Survival Rating	125 mph | 201 km/h

Mechanical Configuration	HP3
Axial Force (FA)	403 lbs | 1792 N
Side Force (FS)	200 lbs | 890 N
Twisting Moment (MT)	344 ft-lbs | 466 Nm
Operating Temperature Range	-40 to +60 C
Max Pressure, PSIG, (if waveguide interface)	5

Regulatory Compliance

FCC	Part 101 Cat. A
Industry Canada Compliance	SRSP310.7 B

ETSI	302217 R1 C3
RoHS-compliant	Yes

Shipping Information

Package Type	Wood Crate
Gross Weight	143 lbs | 69.8 kg

Dimensions, L x W x H	47 x 28 x 48in | 119 x 71 x 122 cm
Shipping Volume	36.56 cu ft | 1.04 cu m

*Additional OEM interfaces and adapters may be available. Contact RadioWaves for a complete and current list of available adapters.

© 2023 Infinite Electronics, Inc. RadioWaves is a registered trademark of Infinite Electronics, Inc.
+1 (978) 459-8800 | sales@radiowaves.com | radiowaves.com

radiowaves an INFINIT® brand — THE LEADER IN MICROWAVE ANTENNA INNOVATION

TECHNICAL DRAWINGS

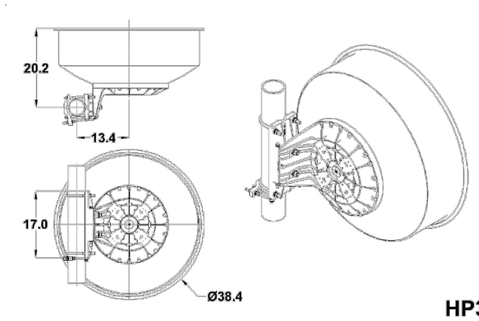

© 2023 Infinite Electronics, Inc. RadioWaves is a registered trademark of Infinite Electronics, Inc.
+1 (978) 459-8800 | sales@radiowaves.com | radiowaves.com

HP3-11 MICROWAVE DETAIL

SCALE: N.T.S.

Product Data Sheet

1-855-276-5772 or 780-702-7577
info@kpperformance.com
15397 117 Ave, Edmonton, AB T5M3X4, Canada

KP PERFORMANCE ANTENNAS

KPP-3SX4-65

3.5 GHz to 4.2 GHz, 65 Degree Sector Antenna, 18.1 dBi, 4-Port, ±45 Slant

- 3.5° fixed electrical downtilt
- ProLine sector with stable and high gain
- Interference mitigation with azimuth and elevation side-lobe suppression
- Ideal for 3-sector frequency-reuse one with LTE equipment

Electrical Specification

Frequency Band	MHz	3500—3800	3800—4200
Gain	dBi	17.9±0.25	18.1±0.25
Polarization		Slant (±45°)	Slant (±45°)
Horizontal HPBW	Degree	65±2	62±3
Horizontal Squint	Degree	±1	±1
Vertical HPBW	Degree	6.5±0.3	6.0±0.3
Electrical Downtilt	Degree	3.5	3.5
Front-to-Back Ratio @ 180°±30°	dB	40	40
Upper Side Lobe Suppression (+20°)	dB	17	17
Cross-polarization Ratio over HPBW	dB	19	20
VSWR		1.3 typ | 1.5 max	1.3 typ | 1.5 max
Return Loss	dB	17 typ | 14 max	17 typ | 14 max
Port-to-Port Isolation	dB	30	30
Max. Input Power per Port	W	50	50
Impedance	Ohms	50	50

Mechanical Specifications

RF Connector Type	N-type Female
RF Connector Quantity	4
RF Connector Position	Bottom of radome
Electrical Grounding	RF connector grounded to reflector and mounting bracket
Radome Material	UV resistant PVC
Reflector Material	Anodized Aluminium
Ingress Protection	IP55 rain and dust resistant
Wind Load, frontal	242N @ 160km/h | 54lbf @ 100mph
Max. Wind Speed	160km/h | 100mph
Temperature Range	-40° to +60° C | -40° to +140° F

Bracket Specifications

Material Type	Powder Coated High-Strength Aluminium
Mechanical Tilt (Degree)	-1 to +12 (Slot 1) | -5 to +8 (Slot 2)
Mounting Type	Pipe Mount
Mounting pole diameter	19 mm – 114 mm | 0.75 in – 4.5 in
Antenna-to-Pipe Distance	121 mm | 4.8 in
Bracket-to-Bracket Distance	677 mm | 26.7 in

© 2018 KP Performance Antennas, Inc. All Rights Reserved. All specifications are subject to change without notice.
See www.kpperformance.ca for more details. Revised 10 September 2018.

Product Data Sheet
1-855-276-5772 or 780-702-7577
info@kpperformance.com
15397 117 Ave, Edmonton, AB T5M3X4, Canada
KP PERFORMANCE ANTENNAS

Sector Dimensions

Length	770 mm	30.3 in
Width	246 mm	9.7 in
Height	67 mm	2.6 in
Net Weight, with brackets	8.3 kg	18.2 lb

Shipping Dimensions

Length	850 mm	33.5 in
Width	315 mm	12.4 in
Height	200 mm	7.9 in
Net Weight	8.4 kg	18.5 lb

Graphical Data

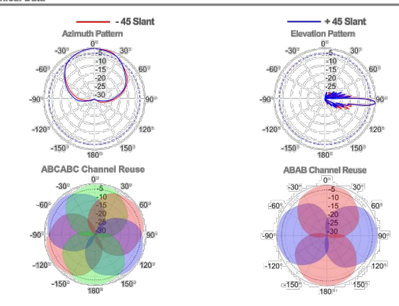

Appendix

HPBW: Average and variation of the antenna's 3dB beamwidth (half power beamwidth) in its horizontal (Azimuth) or vertical (Elevation) pattern.
Horizontal Squint: Angle in the antenna's azimuth pattern in which the maximum gain occurs. Reported is the maximum variation in the frequency band.
Electrical Downtilt: Angle in the antenna's elevation pattern in which the maximum gain occurs.
Gain: Antenna's average gain and variation in each frequency band.
Front to Back Ratio @ 180°±30°: Difference between the antenna's maximum gain and the maximum gain in the antenna's back lobe over ±30° angles.
Upper Side Lobe Suppression: The maximum value for the antenna's elevation upper side lobes from the main beam to +20°.
Cross-polarization Ratio over HPBW (dB): Maximum difference between the co-polarization and cross-polarization gain across the sector's HPBW.

© 2018 KP Performance Antennas, Inc. All Rights Reserved. All specifications are subject to change without notice.
See www.kpperformance.ca for more details. Revised 10 September 2018.

KPP-3SX4-65 ANTENNA DETAIL

SCALE: N.T.S.

PLANS PREPARED FOR:

new j

PLANS PREPARED BY:

T-SQUARED SITE SERVICES
2501 SHENANGO VALLEY FREEWAY
SUITE 3
HERMITAGE, PA 16148
724.308.7855
www.t-sqrd.com

COPYRIGHT © 2023 T-SQUARED SITE SERVICES, LLC

ENGINEERING LICENSE & SEAL:

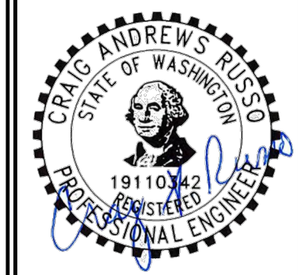

THESE DOCUMENTS ARE CONFIDENTIAL AND ARE THE SOLE PROPERTY OF NEW J AND MAY NOT BE REPRODUCED, DISSEMINATED OR REDISTRIBUTED WITHOUT THE EXPRESS WRITTEN CONSENT OF NEW J.

REVISIONS:

DESCRIPTION	DATE	BY	REV
FINAL CDS	08.25.23	TM	1
ISSUED FOR REVIEW	08.21.23	TM	0

PROJECT INFO

SITE ID# : SPC007

SITE NAME:
COE ROAD

S. COE ROAD
SPOKANE, WA

PROPOSED
160' SELF-SUPPORT

EQUIPMENT DETAILS

SHEET NUMBER: A-6

REV.: 1

69009

Outdoor TDD eNodeB – LBS8529 Specification

All rights reserved © Leax Arkivator Telecom USA Inc.

1 Overview

1.1 Introduction

LBS8529 eNodeB (eNB) is an advanced dual carrier outdoor LTE base station that operates in Time Division Duplexing (TDD) mode. This eNB provides users with high-speed broadband wireless access to the Internet using 2*20W output power (2x2 MIMO with 20W output each channel). This eNB is capable of operating in Dual Carrier (DC) or Single Carrier mode.

With high capacity and easy deployment, LBS8529 can help mobile operators and wireless Internet Service Providers (ISP) to provide better coverage and higher capacity with minimal effort. The typical topology of LBS8529 deployment is as follows.

1.2 Features

Easy Deployment

- Super compact and beautiful design, suitable for private and public deployments.
- Higher transmission power for extended coverage.
- Any IP based backhaul can be used, including public transmission.
- Multiple choices for synchronization: GPS, 1588 V2.
- Lower power consumption to reduce OPEX.
- Plug-and-Play with SON capabilities.
- IoT with all standard EPC

Better Performance

- Excellent Non-Line of Sight (NLOS) coverage performance.
- External high-gain antenna
- Support RET function AISG 2.0
- Peak rate 220Mbps@ Downlink, 28Mbps@Uplink with 2x20MHz spectrum.
- 192 concurrent users per eNodeB
- Support 5MHz/10MHz/15MHz/20MHz operation bandwidth

Easy Management

- GUI-based local and remote Web management
- TR069 network management interface support

2 Technical Specification

2.1 Hardware Specification

Item	Description
LTE Mode	TDD
Frequency Bands [a]	B41/42/43/48
Channel Bandwidth	5MHz, 10MHz, 15MHz, 20MHz 5MHz+5MHz, 10MHz+10MHz, 20MHz +20MHz 20MHz +10MHz, 20MHz +15MHz
MAX Output Power	43dBm/Ant
Receive Sensitivity [b]	-102 dBm
Synchronization	GPS, 1588 V2
Backhaul	One optical (SFP) and one RJ-45 Ethernet interface (1 GE)
MIMO	DL: 2 x 2
Dimensions	440 x 240 x 140 mm 17.3 x 9.5 x 5.5 inches
Mounting Options	Pole, wall
Antenna	External high-gain antenna
Power Consumption	< 160W
Power	48V DC, AC adaptor (multi-national standards)
Weight	12 kg/26 lbs

[a] Different models support different frequency bands.

[b] The test method of receiving sensitivity is proposed by the 3GPP TS 36.104, which is based on 5 MHz bandwidth, FRC A1-3 in Annex A.1 (QPSK, R=1/3, 25RB) standard.

2.2 Software Specification

Item	Description
LTE Standard	3GPP Release 12
Peak Rate	DL 220 Mbps, UL 28 Mbps
User Capacity	192 concurrent users
QoS Control	3GPP standard QCI
Modulation	UL: QPSK, 16QAM, 64QAM DL: QPSK, 16QAM, 64QAM
Voice Solution	CSFB, VoLTE
Traffic Offload	Local breakout
SON	Automatic setup ANR (Automatic Neighbor-cell Recognition) PCI confliction detection
Spectrum Scanning	Supported
UL Interference Detection	Supported
RAN Sharing	Supported
Network Management Interface	TR-069 interface protocol
MTBF	≥ 150000 hours
MTTR	≤ 1 hour
Maintenance	Remote/local maintenance
	Online status management
	Performance statistics
	Fault management
	Local or remote software upgrade

	Logging
	Connectivity diagnosis
	Automatic start and configuration
	Alarm reporting
	KPI Recording
	User information tracing
	Signaling trace

2.3 Environment Specification

Item	Description
Operating Temperature	-40°C ~ 55°C
Storage Temperature	-45°C to 70°C
Humidity	5% ~ 95%
Atmospheric Pressure	70kPa ~ 106kPa
Ingress Protection Rating	IP66
Power interface Lightning Protection	Differential mode: ±10 KA Common mode: ±20 KA

LBS8529 DETAIL

SCALE: N.T.S.

PLANS PREPARED FOR:

new j

PLANS PREPARED BY:

T-SQUARED SITE SERVICES

2501 SHENANGO VALLEY FREEWAY
SUITE 3
HERMITAGE, PA 16148
724.308.7855
www.t-sqrd.com

COPYRIGHT © 2023 T-SQUARED SITE SERVICES, LLC

ENGINEERING LICENSE & SEAL:

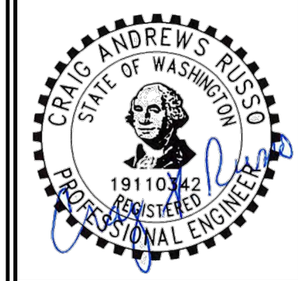

THESE DOCUMENTS ARE CONFIDENTIAL AND ARE THE SOLE PROPERTY OF NEW J AND MAY NOT BE REPRODUCED, DISSEMINATED OR REDISTRIBUTED WITHOUT THE EXPRESS WRITTEN CONSENT OF NEW J.

REVISIONS:

DESCRIPTION	DATE	BY	REV
FINAL CDS	08.25.23	TM	1
ISSUED FOR REVIEW	08.21.23	TM	0

PROJECT INFO

SITE ID# : SPC007

SITE NAME:
COE ROAD

S. COE ROAD
SPOKANE, WA

PROPOSED
160' SELF-SUPPORT

EQUIPMENT DETAILS

SHEET NUMBER: A-7

REV.: 1

69009

Cambium Networks™

PTP 850C Millimeter Wave Radio

Specifications

RADIO

- 11-18 GHz
- 1+0 up to 4+0 Single/Dual Polarization, 1+1/2+2 HSB, 1+1/2+2 HSB-SD, 2+0 XPIC, 2x2+0 East/West Single/Dual Polarization

Radio Features

- Enhanced Multi-Carrier ABC (up to 2+0)
- Protection: 1+1 HSB/2+2 HSB, 1+1 HSB-SD 1
- High spectral utilization: BPSK to 4096 QAM w/ACM
- Channel bandwidth: 14 to 224 MHz2
- XPIC
- 2x2/4x4 LoS MIMO1
- Advanced Frequency Reuse (AFR)1
- Advanced Space Diversity (ASD)1
- Dual band (with PTP-850C, PTP-820S, PTP-820C)1
- Multiband (with PTP-820E or PTP-850E)1

ETHERNET

Ethernet Interfaces

- Port 1:

DC Port

- Port 2:

RJ-45 - Electric Multi Rate 1/2.5/10 Gbps traffic interface/PoE port

- Port 3:

SFP – 1/2.5G traffic interface and Dual band port

- Port 4:

SFP – 1/10GE traffic interface/MIMO extension port (SFP+)

- Port 5:

SFP – 1/10GE traffic interface (SFP+)

- Port 6:

RJ-45 – Management/Protection interface - 100 Base-T

- Note: SFP and SFP+ devices must be of industrial grade (-40°C to +85°C)

Ethernet Features

- MTU – 9612 Bytes
- Quality of Service
  - Multiple Classification criteria (VLAN ID, p-bits, IPv4 DSCP, IPv6 TC, MPLS EXP)
  - 8 CoS queues per port
  - Deep buffering (configurable up to 64 Mbit per queue)
  - WRED
  - P-bit marking/remarking
- 4K VLANs
- VLAN add/remove/translate
- Y.1731 Ethernet OAM
- Y.1731 Ethernet Bandwidth Notification (ETH-BN)

MANAGEMENT

- SNMP
- REST
- SDN Support:
  - NETCONF/YANG

SYNCHRONIZATION

- Enhanced Ethernet Equipment Clock (eEEC) Specification (G.8262.1)
- PTP Telecom Boundary Clock (T-BC) and Time Slave Clock (T-TSC) Specification (G.8273.2)
- PTP Telecom Transparent Clock (T-TC) Specification (G.8273.3)
- Enhanced SyncE Network Limits (G.8261, clause 9.2.1)
- Enhanced PTP Network Limits (G.8271.1)
- Ethernet Synchronization Messaging Channel (ESMC) (G.8264, clause 11)
- PTP Telecom Profile for Time (Full Timing Support) (G.8275.1)

STANDARD

MEF

- Carrier Ethernet 2.0 (CE 2.0)
- Supported Ethernet Standards
- 10/100/1000base-T/X (IEEE 802.3)
- 10GBase-LR (IEEE 802.3)
- Ethernet VLANs (IEEE 802.3ac)
- Virtual LAN (VLAN, IEEE 802.1Q)
- Class of service (IEEE 802.1p)
- Provider bridges (QinQ – IEEE 802.1ad)
- Link aggregation (IEEE 802.1AX)
- Auto MDI/MDIX for 1000baseT
- RFC 1349: IPv4 TOS
- RFC 2474: IPv4 DSCP
- RFC 2460: IPv6 Traffic Classes

SECURITY

- HTTPS
- SNMPv3
- SSH
- SFTP
- RADIUS authentication and authorization
- TACACS+ Authentication, Authorization, and Accounting (session-based)
- AES Encryption – AES 256*

STANDARDS COMPLIANCE

- Radio Spectral Efficiency: EN 302 217-2-2
- EMC: EN 301 489-1, EN 301 489-4, Class B (Europe), FCC 47 CFR, part 15, class B (US), ICES-003, Class B (Canada), TEC/EMI/TEL-001/01, Class B (India)
- Surge: EN61000-4-5, Class 4 (for PWR and ETH1/PoE ports)
- Safety: EN 60950-1, IEC 60950-1, UL 60950-1, CSA-C22.2 No.60950-1, EN 60950-22, UL 60950-22, CSA C22.2.60950-22
- Storage: ETSI EN 300 019-1-1 Class 1.2
- Transportation: ETSI EN 300 019-1-2 Class 2.
- Ingress Protection: IP67

TECHNICAL SPECIFICATION

Mechanical Specifications

- Dimensions (Direct Mount): 322mm(H), 227/270mm(W), 86mm(D), 6 kg 12.67"(H), 8.93"/10.62"(W), 3.38"(D), 13.2 lbs.
- Pole Diameter Range (for Remote Mount Installation): 8.89 cm – 11.43 cm 3.5" – 4.5"

Environmental Specifications

- -33°C to +55°C (-45°C to +60°C extended); -27°F to +131°F (-49°F to +140°F extended)

Power Input Specifications

- Standard Input: -48 VDC

PTP 850C SPECIFICATION SHEET

- DC Input range: -40.5 to -60 VDC

Power Consumption Specifications

- Active (Multicore operation) – 90W

PoE Injector Mechanical Specifications

- Dimensions – 134mm(H), 190mm(W), 62mm(D), 1 kg
- PoE Injector Environmental Specifications
- -33□C to +55□C (-45□C to +60□C extended)

PoE Injector Power Input Specifications

- Standard Input: -48 or +24 VDC (Optional)
- DC Input range: ±(18/40.5 to 60) VDC (+18VDC extended range is supported as part of the nominal +24VDC support)

PoE Injector Interfaces

- GbE Data Port supporting 10/100/1000Base-T
- Power-Over-Ethernet (PoE) Port
- DC Power Port –40V to -60V (a PoE supporting two redundant DC feeds each supporting ±(18-60)V is available)

*Support in future release, for availability, please check release notes

1 Planned for future release.

2 224 MHz is planned for future release.

Rev Q42020

Rev Q42020

PTP850C DETAIL

SCALE: N.T.S.

PLANS PREPARED FOR:

new j

PLANS PREPARED BY:

T-SQUARED SITE SERVICES

2501 SHENANGO VALLEY FREEWAY
SUITE 3
HERMITAGE, PA 16148
724.308.7855
www.t-sqrd.com

COPYRIGHT © 2023 T-SQUARED SITE SERVICES, LLC

ENGINEERING LICENSE & SEAL:

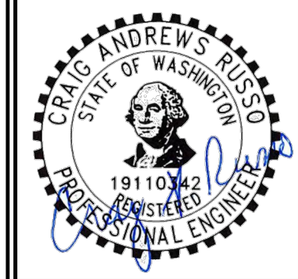

THESE DOCUMENTS ARE CONFIDENTIAL AND ARE THE SOLE PROPERTY OF NEW J AND MAY NOT BE REPRODUCED, DISSEMINATED OR REDISTRIBUTED WITHOUT THE EXPRESS WRITTEN CONSENT OF NEW J.

REVISIONS:

DESCRIPTION	DATE	BY	REV
FINAL CDS	08.25.23	TM	1
ISSUED FOR REVIEW	08.21.23	TM	0

PROJECT INFO

SITE ID# : SPC007

SITE NAME:
COE ROAD

S. COE ROAD
SPOKANE, WA

PROPOSED
160' SELF-SUPPORT

EQUIPMENT DETAILS

SHEET NUMBER: A-8

REV.: 1

69009

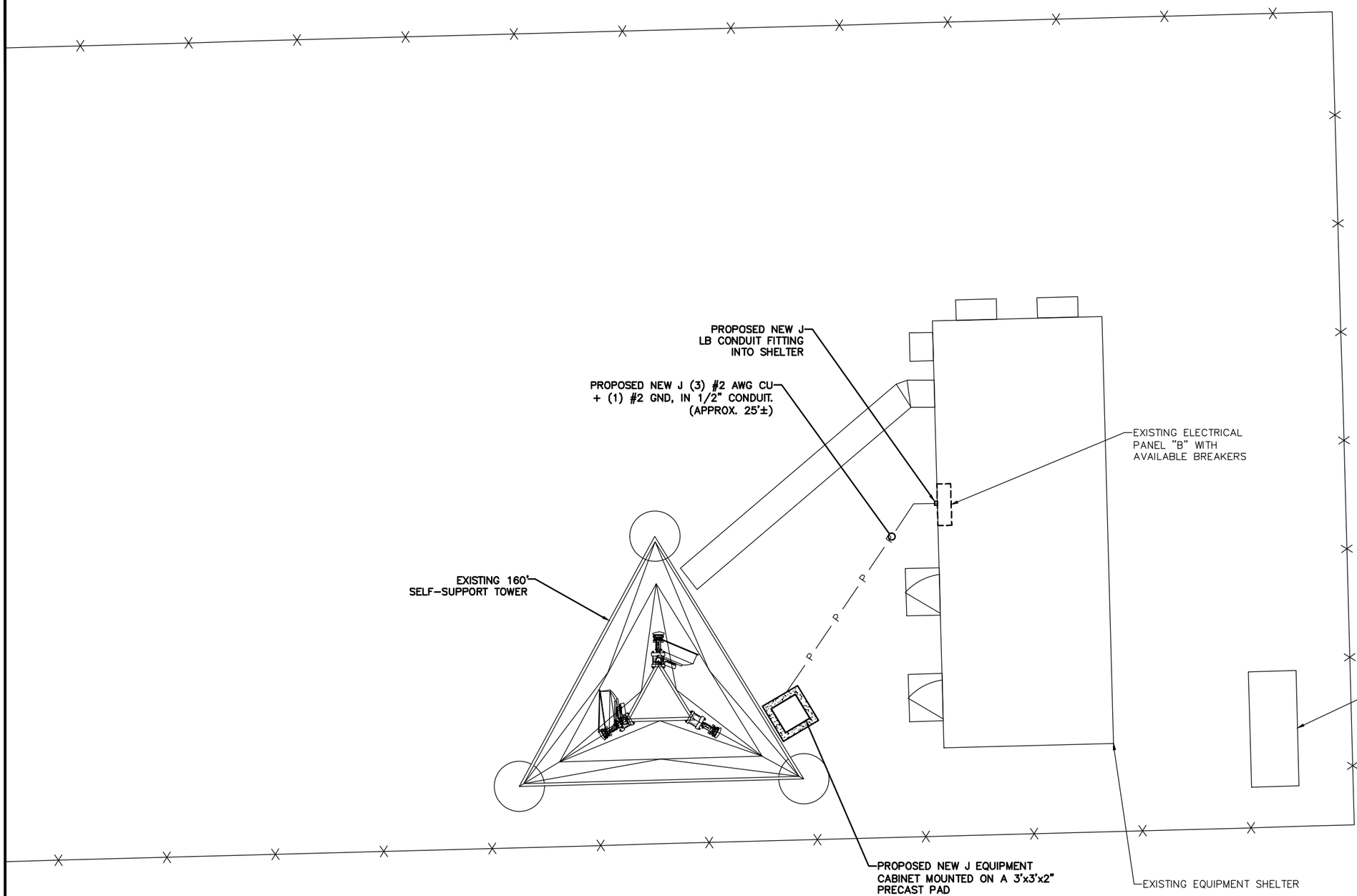

1 UTILITY ROUTING

SCALE: 1/8"=1'-0"

A

PLANS PREPARED FOR:

new j

PLANS PREPARED BY:

T-SQUARED SITE SERVICES

2501 SHENANGO VALLEY FREEWAY
SUITE 3
HERMITAGE, PA 16148
724.308.7855
www.t-sqrd.com

COPYRIGHT © 2023 T-SQUARED SITE SERVICES, LLC

ENGINEERING LICENSE & SEAL:

CRAIG ANDREWS RUSSO
STATE OF WASHINGTON
19110342
REGISTERED
PROFESSIONAL ENGINEER

THESE DOCUMENTS ARE CONFIDENTIAL AND ARE THE SOLE PROPERTY OF NEW J AND MAY NOT BE REPRODUCED, DISSEMINATED OR REDISTRIBUTED WITHOUT THE EXPRESS WRITTEN CONSENT OF NEW J.

REVISIONS:

DESCRIPTION	DATE	BY	REV
FINAL CDS	08.25.23	TM	1
ISSUED FOR REVIEW	08.21.23	TM	0

PROJECT INFO

SITE ID# : SPC007

SITE NAME:
COE ROAD

S. COE ROAD
SPOKANE, WA

PROPOSED
160' SELF-SUPPORT

UTILITY PLAN

SHEET NUMBER: E-1

REV.: 1

69009

LEGEND:

——G——G——	GROUND RING
——G●——G——	GROUND ROD EXOTHERMICALLY WELDED TO GROUND RING
⊗	GROUND ROD
▲	MECHANICAL CONNECTION
●	EXOTHERMIC WELD
⊠	GROUND ROD TEST WELL

GROUNDING NOTES:

1. GROUND CONDUCTOR BEND RADIUS SHALL NOT BE LESS THAN 8".

2. MINIMUM SPACING BETWEEN GROUND RODS SHALL NOT BE LESS THAN 10', UNLESS NOTED OTHERWISE.

3. CONTRACTOR SHALL BOND THE MAIN GROUND BAR (MGB) & EXTERNAL GROUND BAR (GB2) TO THE GROUND ROD USING 2 AWG TINNED SOLID BARE COPPER CONDUCTORS AND EXOTHERMIC WELDS.

4. ALL GROUNDING/BONDING CONDUCTORS LOCATED ABOVE FINISHED GRADE SHALL BE RUN IN 1" PVC CONDUIT.

5. CONTRACTOR SHALL NOTIFY THE OWNER/TENANT CONSTRUCTION MANAGER TO ALLOW THE OWNER/TENANT CONSTRUCTION MANAGER TO INSPECT THE GROUNDING SYSTEM PRIOR TO BACKFILLING.

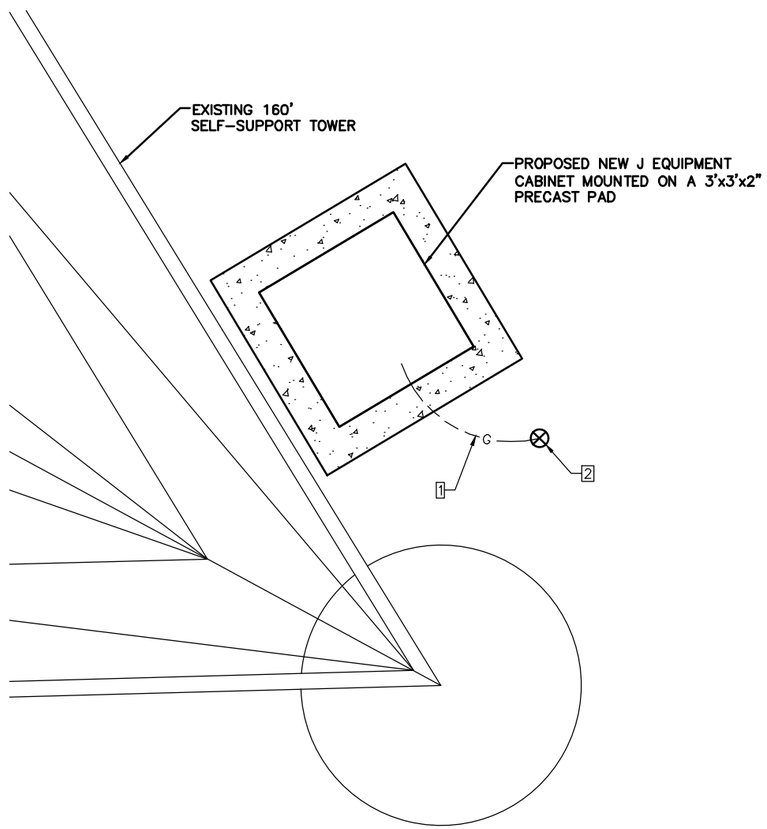

1. #2 SOLID TINNED BARE COPPER GROUND WIRE FROM CABINET TO GROUND ROD.

2. 5/8"ø×10'-0" GROUND ROD (TYP)

1 GROUNDING DETAILS (TYPICAL)
N.T.S.

PLANS PREPARED FOR:

new j

PLANS PREPARED BY:

T-SQUARED SITE SERVICES
2501 SHENANGO VALLEY FREEWAY
SUITE 3
HERMITAGE, PA 16148
724.308.7855
www.t-sqrd.com

COPYRIGHT © 2023 T-SQUARED SITE SERVICES, LLC

ENGINEERING LICENSE & SEAL:

CRAIG ANDREWS RUSSO
STATE OF WASHINGTON
19110342
REGISTERED
PROFESSIONAL ENGINEER

THESE DOCUMENTS ARE CONFIDENTIAL AND ARE THE SOLE PROPERTY OF NEW J AND MAY NOT BE REPRODUCED, DISSEMINATED OR REDISTRIBUTED WITHOUT THE EXPRESS WRITTEN CONSENT OF NEW J.

REVISIONS:

DESCRIPTION	DATE	BY	REV
FINAL CDS	08.25.23	TM	1
ISSUED FOR REVIEW	08.21.23	TM	0

PROJECT INFO

SITE ID# : SPC007

SITE NAME:
COE ROAD

S. COE ROAD
SPOKANE, WA

PROPOSED
160' SELF-SUPPORT

GROUNDING
DETAILS

SHEET NUMBER: G-1

REV.: 1

69009

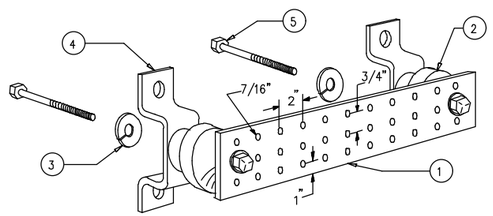

LEGEND

1– COPPER GROUND BAR, ¼"X 4"X 20". HOLE CENTERS TO MATCH NEMA DOUBLE LUG CONFIGURATION.
2– INSULATORS.
3– 5/8" LOCKWASHERS.
4– WALL MOUNTING BRACKET.
5– 5/8–11 X 1" H.H.C.S.BOLTS.

1 INSULATOR GROUND BAR DETAIL (AS REQUIRED)
N.T.S.

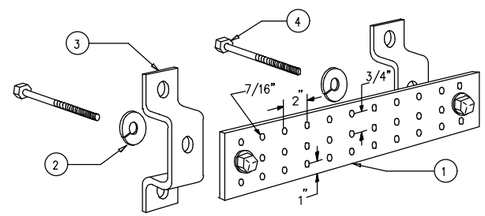

LEGEND

1– COPPER GROUND BAR, ¼"X 4"X 20". HOLE CENTERS TO MATCH NEMA DOUBLE LUG CONFIGURATION.
2– 5/8" LOCKWASHERS.
3– WALL MOUNTING BRACKET.
4– 5/8–11 X 1" H.H.C.S.BOLTS.

2 UNINSULATED GROUND BAR DETAIL (AS REQUIRED)
N.T.S.

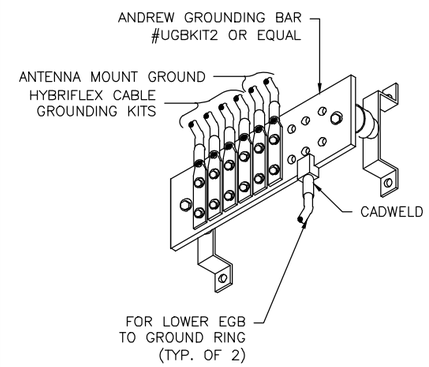

3 EQUIPMENT GROUND BAR
N.T.S.

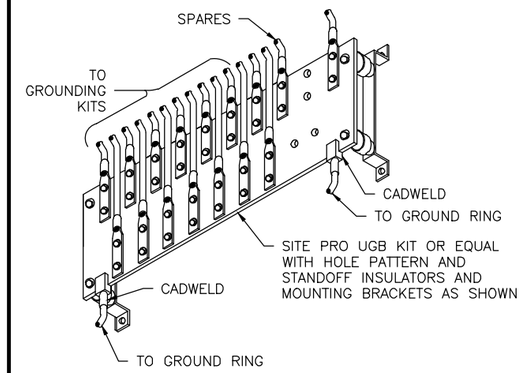

4 MASTER GROUND BAR (MGB)
N.T.S.

TYPICAL CADWELD GROUNDING CONNECTIONS

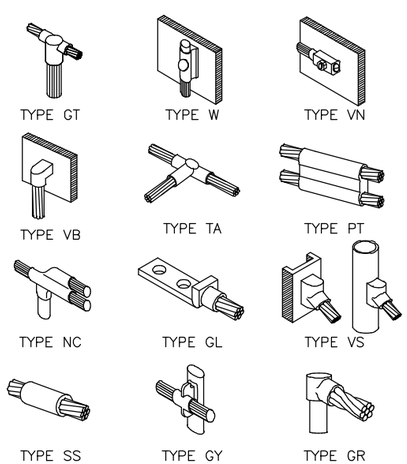

5 CADWELD DETAILS
N.T.S.

6 NOT USED
N.T.S.

7 NOT USED
N.T.S.

PLANS PREPARED FOR:

new j

PLANS PREPARED BY:

T-SQUARED SITE SERVICES
2501 SHENANGO VALLEY FREEWAY
SUITE 3
HERMITAGE, PA 16148
724.308.7855
www.t-sqrd.com

COPYRIGHT © 2023 T-SQUARED SITE SERVICES, LLC

ENGINEERING LICENSE & SEAL:

CRAIG ANDREWS RUSSO
STATE OF WASHINGTON
19110342
REGISTERED
PROFESSIONAL ENGINEER

THESE DOCUMENTS ARE CONFIDENTIAL AND ARE THE SOLE PROPERTY OF NEW J AND MAY NOT BE REPRODUCED, DISSEMINATED OR REDISTRIBUTED WITHOUT THE EXPRESS WRITTEN CONSENT OF NEW J.

REVISIONS:

DESCRIPTION	DATE	BY	REV
FINAL CDS	08.25.23	TM	1
ISSUED FOR REVIEW	08.21.23	TM	0

PROJECT INFO

SITE ID# : SPC007

SITE NAME:
COE ROAD

S. COE ROAD
SPOKANE, WA

PROPOSED
160' SELF-SUPPORT

GROUNDING
DETAILS

SHEET NUMBER: G-2

REV.: 1

69009